GSSE GENERAL CATALOGUE

CONTROL VALVE
PRESSURE REGULATOR
TANK BLANKETING
SAFETY VALVE
ACTUATOR

MADE IN IRAN



گروه سازندگان صنعت اسپادانا (دانش بنیان)

Goroohe Sazandegan Sanat Espadana (GSSE)

INNOVATIVE FLUID MANAGEMENT
TOTAL SOLUTION FOR YOUR
PROCESS REQUIREMENTS

WWW.GSSE-CO.COM

PUB NO.:2026-GEN-REV19

GSSE

is a knowledge enterprise company active in design and manufacturing and simulate all of our products while considering international stand and selection, design, simulation and manufacturing of our product

- Control Valves (Globe, Ball, Butterfly)
- Pressure Safety Valves (Conventional , Bellows, Pilot Operated)
- Pressure Regulator Valve (Back Pressure Regulator Valve, Pressure Reducing Regulator Valve
- On-Off Valve (Ball valves, Orbit Ball Valves, ESDV, HIPPS) Our products have been in service i

GSSE fully modernized CNC machining facilities assembly and test equipment enable us to offer be

CAD-CAM Online network from our engineering office to the manufacturing shop help us to make



g of valves for Oil and Gas, Power plant and industrial plants. Our skilled engineering team design
ards API, ASME, ANSI, MSS, NACE, ISO, ISA, BS, ATEX, IPS and IGS. We use latest software for sizing
ts. GSSE is manufacturing various types of valve including:

& Tank Blanketing Regulator Valve)

in oil and gas refineries, petrochemicals, power plants and other industries for many years.

st service to our clients.

our job in the shortest time.



Contents

		Page
Quality		6
Markets		6
Design Research and Development		6
FEA Simulation		6
Casting Simulation		6
CFD Simulation		7
Control Valve		8
Sizing And Selection		8
Hard Facing		9
Production Facilities		10
Testing & Quality Control		12
Control Valves	TG Series	16
Control Valves	CG Series	18
Control Valves	LG Series	20
Control Valves	MF Series	22
Control Valves	DP Series	24
Control Valves	RG Series	26
Control Valves	SB Series	28
Control Valves	NABA Series	30
Control Valves	BFD Series	32
Control Valves	BFT Series	34
Sever Service Control Valve	SF Desuperheater Configuration	36
Sever Service Control Valve	Tank Drain Control Valve TD Series	38
Sever Service Control Valve	VL Series	40
Sever Service Control Valve	High-Pressure Labyrinth Trim : HPL Series	42
Sever Service Control Valve	Anti Surge Large Mass Flow : LMF	44
Sever Service Control Valve	Heavy Oil Erosion Resistant : HOV	46
Relief Valve and Back Pressure Regulator		50
Pressure Regulator (Pilot-operated) N2B		52
Pressure Regulator (Pilot-operated) N2S		53
Pressure Reducing Regulator (Direct-operated) ME05R		54
Back Pressure Regulator (Direct-operated) ME08R		55
Pressure Regulator (Pilot-operated) E2H		56
Back Pressure Regulator (Pilot-operated) E2H-R		57
Pressure Regulator (Pilot-operated) ZN98-TGC		58
Back Pressure Regulator (Pilot-operated) ZN98-TGC-Z3EG		59
Pressure Reducing Regulator (Direct-operated) TZ05		60
Back Pressure Regulator (Direct-operated) TZ08		61
Pressure Regulator (Pilot-operated) EF90		62
Back Pressure Regulator (Pilot-operated) ZF90		63
Pressure Regulator (Pilot-operated) T5L		64
Back Pressure Regulator (Pilot-operated) T5L-R		65

Contents	Page
Pressure Regulator (Pilot-operated) N9	66
Pressure Regulator (Pilot-operated) DE0A	67
Pressure Reducing Regulator (Direct-operated) Z30	68
Back Pressure Regulator (Direct-operated) Z30-R	69
Pressure Reducing Regulator (Direct-operated) MN5R	70
Back Pressure Regulator (Direct-operated) MN8R	71
Back Pressure Regulator(Pilot-operated) Z3EG	72
Pressure Reducing Regulator (Direct-operated) S7D	73
GSSE Safety Relief Valve EN00	79
GSSE Safety Relief Valve EN00-UM	80
GSSE Safety Relief Valve EN000	81
GSSE Safety Relief Valve EN82 , ZV82	82
GSSE Pilot-Operated Safety Relief Valves ZN00 , DN00	83
GSSE Pilot-Operated Safety Relief Valves VN00 , ED900	84
GSSE Boiler Safety Valves EA 11, EF 11	86
GSSE Boiler Safety Valves EF41, EF43, DF00-5	87
GSSE Boiler Safety Valves EN00/P, ZN00-40	88
GSSE Boiler Safety Valves ES00/ ZS00	89
GSSE TYPES OF ACTUATORS AND INSTRUMENTS	92
DS Series	94
DM Series	96
PS Series	98
PSH Series	100
QT Series	102
RD Series	104
PQ Series	106
RP Series	108
MDS Series	110
SYP Pneumatic Series	112
SYH Hydraulic Series	114
ELH Series	116
Gas Over Oil GOV Series	118
Rotary Vane Valve Actuators	120
Motorized Actuator	124
GSSE TYPES OF PRESSURE REGULATOR AND BACK PRESSURE VALVES	126
GSSE TYPES OF PRESSURE RELIEF, SAFETY AND PRESSURE VACUUM VALVE	128
GSSE TYPES OF ACTUATORS AND INSTRUMENTS	130
Applicable International Standards (Design and Material)	132
Certificates	134

Quality

GSSE is totally committed to Quality and a smooth integration of all departments with the Quality Assurance and Quality Procedures.

GSSE is qualified to ISO 9001:2015, HSE-MS, ISO / TS 29001:2010 International Standards.

This guarantees that all our products are designed, manufactured and delivered in accordance with the most strict customer requirements. By this we achieve our main goal “to offer a high quality product and service to ensure a high degree of satisfaction and fidelity of our customers”.

Markets

Our Valves are used in many different applications such as oil and gas, upstream and downstream offshore, chemical, petrochemical & cryogenic services.

We provide spare parts to support our customers.

Design Research and Development

Using advanced software applications including Finite Element Analysis (FEA), Computational Fluid Dynamics (CFD) and Casting Simulation helps GSSE’s engineers to design superior quality valves for any demanding performance requirement.

FEA Simulation

Stress calculation using 3D finite element analysis will be done for all GSSE products, specially for the pressure containing parts in control valves and pressure safety valves to make sure about safety factor in all required process conditions as well as testing criteria. We will also do custom design for our valuable clients .

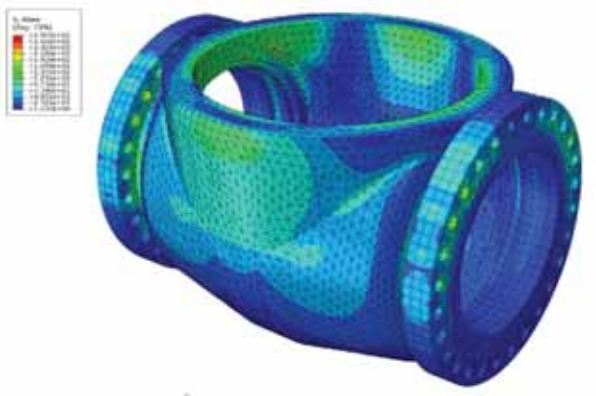

Casting Simulation

Casting process is simulated using the Finite Element Method (FEM). It allows the modeling of Thermal Heat Transfer (Heat flow), including Radiation with View Factors, Fluid flow, including mold filling, Stresses fully coupled with the thermal solution (Thermo -mechanics). Besides that, it includes also Micro structure/Heat treatment modeling, Grain structure modeling and Porosity modeling.

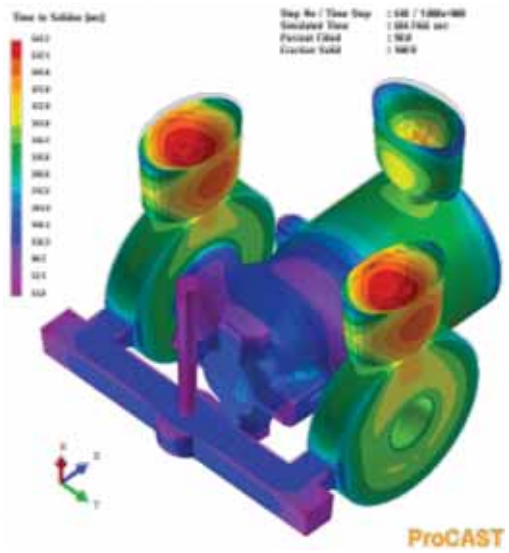

CFD Simulation

In a growing number of industries, numerical simulations of flow processes are becoming more and more popular and are increasingly used as a development tool. At the basis of this tool is a CFD (Computational Fluid Dynamics) code, which has already been integrated into numerous software programs.

Today, CFD tools are indispensable as a supplementary tool in control valve development in certain construction stages of a component CFD not only allows valve plugs and bodies to be optimized during the construction stages. It also permits to determine very high flow coefficients. This benefit plays a major role as only very few test benches are built to test valves in large sizes with the associated Cv coefficients. The increasing size of industrial plants, however; calls for higher flow capacities and consequently also larger valve sizes Non-optimized valve geometry is usually the main cause for many problems related to response time, actuation force and energy consumption.

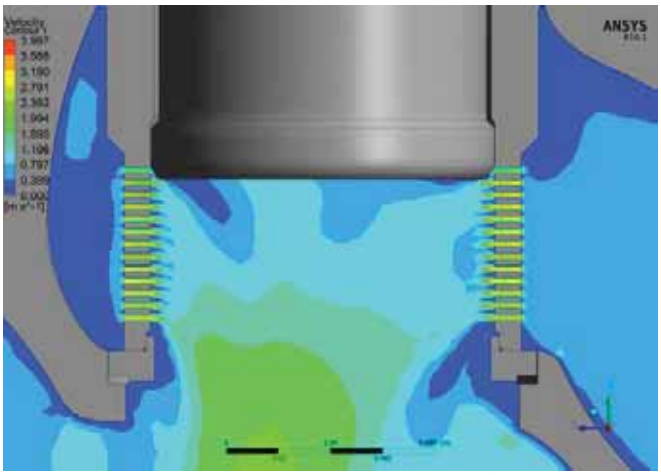

To overcome these limitations and problems we have done a thorough numerical and experimental analysis of control valves. The main influential geometry parameters of the control valve are defined for numerical analyses. In the next step the basic theory of the numerical simulation, including the 3D modeling, meshing and parameterization, is used. The validation of the numerical fluid model of the valve is done by comparing simulation and experimental results.

In control valves regulating the flow of liquid media, cavitation may occur depending on the process data and valve type.

Under cavitation conditions, the noise emission increases considerably and erosion can occur at the valve trim depending on the cavitation intensity.

Using CFD, the point of incipient cavitation can partly be determined. Cavitation is understood to mean the process during which the pressure at the narrowest now cross-section inside the valve reaches vapor pressure and the first small vapor bubbles start to form. These bubbles are dragged along by the flow into areas of higher pressures where they implode. Expressed in numerical terms, the process occurs when the static pressure inside the valve falls below the vapor pressure.

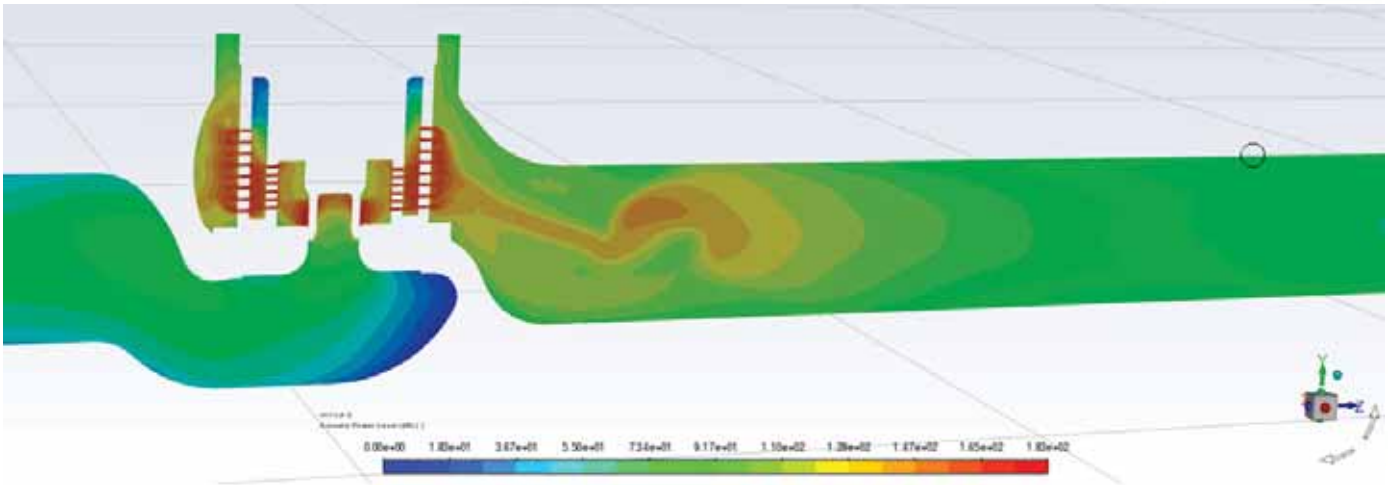

Control Valve

Contrarily to other types of valves, the function of control valves is to absorb a fraction of the inlet pressure to modulate the fluid flow rate and maintain under control the plant conditions.

In this process an amount of energy proportional to the pressure drop and the flow rate is converted into turbulences, heat, vibration, noise and wearing of valve components.

Best approach to the problem is the cage guided valve. In the cage guided design, the plug is guided along its full stroke by the cage, with very small clearance, so that vibration is suppressed. Cage guided design is recognized as the best design in heavy duty service control valves.

Designs include unbalanced plug disc for valve sizes up to 4" and balanced plug disc for valve sizes 3" and larger. The use of balanced plugs allows achieving Class IV and V seat leak rates, whichever the pressure and the temperature. Also, if temperature does not exceed 250°C / 480°F, Class VI (bubble tight) can be given as an option.

GSSE control valves have been designed to be operated by pneumatic, electric or electro-hydraulic actuators, including any type of accessories, at request, and accepting any type of control signals. When electric actuators / accessories are used all type of protections can be provided, including explosion proof or intrinsically safe.

Our designs have been successfully used in power plants as well as gas, oil, fertilizers and other process industries. Noise and vibration have been reduced, and valve internals life has been extended.

Sizing And Selection

We use latest version of CONVAL sizing software to calculates the flow properties based on client process specification, and select from the GSSE database the control valve which is the most accurate for this process.

Some of the possible parameters which can be calculated with this program are:

- **Cv calculation**
- **Fluid properties and state in operation condition**
- **Noise level**
- **Fluid velocity**
- **Power loss inside the valve**
- **Two phase fluid conditions if it is required**
- **Actuator forces**

Hard Facing

Stellite No. 6 is the most common of all hard facing materials used in the control valve industry. It has one of the best combinations of corrosion, abrasion and impact resistance. In addition, it has a low coefficient of friction with itself and an even lower one with Stellite No. 12, for higher hardness, we use Stellite 6H which gives similar property like HVOF Tungsten Carbide.

We use PTA method for Stellite hard facing. The PTA process which is fully automated by KUKA robotic arm and programmable to do cladding on any seat , plug, disk nozzle etc. Providing a high degree of reproducibility of the weld overlays. In addition, because of the highly concentrated heat source, this process benefits from high powder utilization and can achieve a very low level of iron dilution in the overlay. Because the hard facing materials are in powder form, it is possible to produce overlays from many different materials and combinations of materials with a wide range of hardness and other properties.

Durability of leakage criteria in sealing area of control valves, pressure Regulator valves and pressure safety valves id highly depend on hard-facing of Stellite weld overlay in the seal parts all GSSE sealing area will be cladded by default to guarantee a long life function in our products.

We have full range welding and cladding facilities for the most famous brands in the different welding methods such as: Automatic Hot wire Tip Tig, Plasma Arc Welding , Micro Tig



Robotic Plasma Transfer Arc Welding



Automatic Hot Wire Tig Welding (TIP TIG)



Fronius Welding



Micro-Tig Bellows Welding



Stellite Weld Overlay

Production Facilities



Our CAD-CAM are linked through network from engineering out put to manufacturing machinery.
Our Horizontal Boring machine equipped with NC Facing and Boring Head to do machining on large size valve bodies without rotating them.



Our CNC Vertical Turret Lathes equipped with Indexing chuck for machining on all valves sides in one setup, this will create an accurate geometry for valve body and bonnets.
GSSE has a large storage of Casting Patterns for almost all of the products such as body , bonnet ,etc.



Most of the large size Patterns are made of aluminum and smaller sizes are made by 3D Printers.
Deep Drawing Dies , and diaphragm dies are all designed and manufactured by GSSE as and important part of our property.
We invested to have a massive stock of semi finished



Body and Bonnets in various size , pressure class and material to save delivery time for our projects.

We have also a large inventory of semi finished products of trim parts , actuators, Balls , Seats Yoke other parts.

GSSE invested considerable sums on stoking forged raw materials in different grades from Caron steel to Inconel.



Sawing Machines



Forged Round Bar Inventory



Lapping Machines



Casing Inventory



Sheet Metal Deep Drawing for Actuator Casing



Semi Finished Products Inventory



Turning Machines Hall



Heat Treatment Dept.



Sand Blasting & Painting



Casting Pattern Inventory

Testing & Quality Control

GSSE has its own in-house testing department, all inspections and tests are performed by qualified and experienced personnel in line with project specifications and data sheets in order to satisfy our Customers and their Commitments expectations. A Quality Control Plan (QCP) and an Inspection and Test Plan (ITP) appropriate to the scope of supply can be issued for Client approval before starting of production activities.

Following tests will be done on our control valve products:

- NDT for all parts while manufacturing
- Tensile Strength Test
- Chemical Analysis Test
- Spring test
- PMI (Positive Material identification)
- Hardness test in both destructive and non destructive
- Coating thickness & Adhesion test
- Hydrostatic testing
- Helium Leak Test for double security packings or Bellows assemblies will be done in house upon client request.
- FAT (Factory Acceptance Test) will take place in house including valve function , Stroking time and Travel, instrumentation proper function , Hysteresis and dead band .
- Capacity test will be done in house up to a certain limit upon client request as an optional test.

Additional tests will be done optional based mutual agreement.

Some of the controls , equipment and tests used in the quality control department:



Spring Test Bench



PMI XRF



Portable Quantometer



Hardness Tester



Helium Leak Detector



Penetration Test



Magnetic Particle Test



Cv Test



Hydrostatic Test



Function Test under Heat



Optical Flatness Viewer



Coating Thickness Tester



Ultrasonic Thickness Gauge



3 Point Internal Micrometer





SSE

ign and Manufaturing of Control Valves:
rument and Process Application
pe Reciprocating, Top Guided, Cage Guided, Labyrinth Trim Anti-Surge
ble Ported, Multi Stage, Microflow, Steam Conditioning, Tank Drain



Cage ball Anti-Noise, Segment and Full Ball
Butterfly Valve, Concentric, Double Offset and
Triple Offset Metal Seal for High Temprature
and High Pressure Service
Rotary Plug

Control Valves

TG Series

Single ported, heavy top-guided control valves are designed with built-in versatility making them the most widely used control valve, well-suited to handle a wide variety of process applications.

Standard features include:

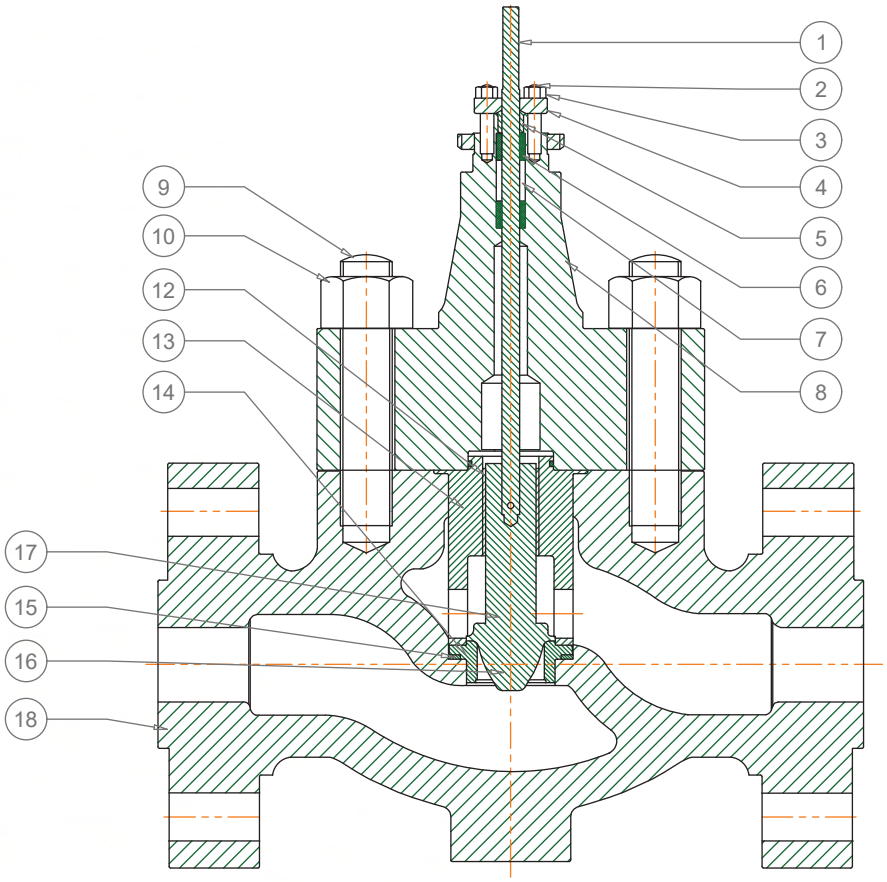

ITEM	PART NAME
1	Plug Stem
2	Packing Flange Stud
3	Packing Flange Nut
4	Packing Flange
5	Packing Follower
6	Packing
7	Lantern Ring
8	Valve Bonnet
9	Body Stud
10	Body Stud Nut
11	Body Gasket
12	Guide Bushing
13	Cage / Retainer
14	Seat Ring
15	Seat Ring Gasket
16	Plug
17	Plug Pin
18	Valve Body

*: Not Shown

Size, Rating and Connection:

Flanged (RF,RTJ,T&G,FF): 1/2”-10” , ANSI 150-2500

Welded: SW: 1/2”-2” , ANSI 150-2500 / BW: 3/4”-2” , ANSI 900-2500 3”-10” , ANSI 150-2500

Screwed: 1/2”-2” , ANSI 150-600

Body Materials:

Carbon Steel

Stainless Steel

Super-alloy

Actuators:

Model DS Spring Diaphragm

Model DM Multi Spring Diaphragm

Trim:

Single Seat Plug Top Guided

Anti-noise and Anti-cavitation Trims, Single or Double Stage Are Available

Characteristic:

Standard: Linear or Equal% or Quick Opening

Anti-cavitation/Anti-noise: Linear

Cv Range:

0.1 - 640

Temperature Range:

-29 °C - 427 °C



Bellows:

The GSSE Standard bellows construction is an externally pressurized design that is capable of operating up to the full valve ANSI B16.34 pressure rating. Guides are located above and below the bellows providing excellent stability to withstand flow induced and mechanical vibration. Bellows material can be

- **Hastelloy C276**
- **Monel 400**
- **Inconel 625**

The standard packing box design and packing design options are used as a secondary stem seal.



Soft Seat for Tight Shut off and Metal Seat , Double Stage Lo-dB / Anti-Cavitation Trim, and anti Noise trims are available on TG series.



Equal Present



Linear



Soft Seat

GSSE Offers Split Body Control valve for TG series.

Lo-dB Trim Designs

The optional Lo-dB trim designs offer single-stage and double-stage noise attenuation benefits. Noise reduction levels of up to 25 dBA are possible, depending on the specific operating conditions.



Engineered



1 Stage Linear



2 Stage Linear

Typical Applications:

- Steam Turbine Generator
- Condenser
- Cooling Tower
- Reactor Building
- Turbine Building
- Reactor Facility Grounds & BOP
- Steam Turbine
- Gas Turbine
- Heat Recovery Steam Generator
- Balance Of Plant
- Distillation
- Hydro processing
- Reforming
- Cracking
- Blending
- Quenching & Fractioning
- Charge Gas Compression
- Separation
- Refrigeration





Needle Type

Control Valves CG Series

The rugged cage guiding, optional pressure balancing and a host of custom engineered trim designs makes these valves suitable for higher pressure drops and other sever service applications, where conventionally designed control valves fail to perform satisfactorily.

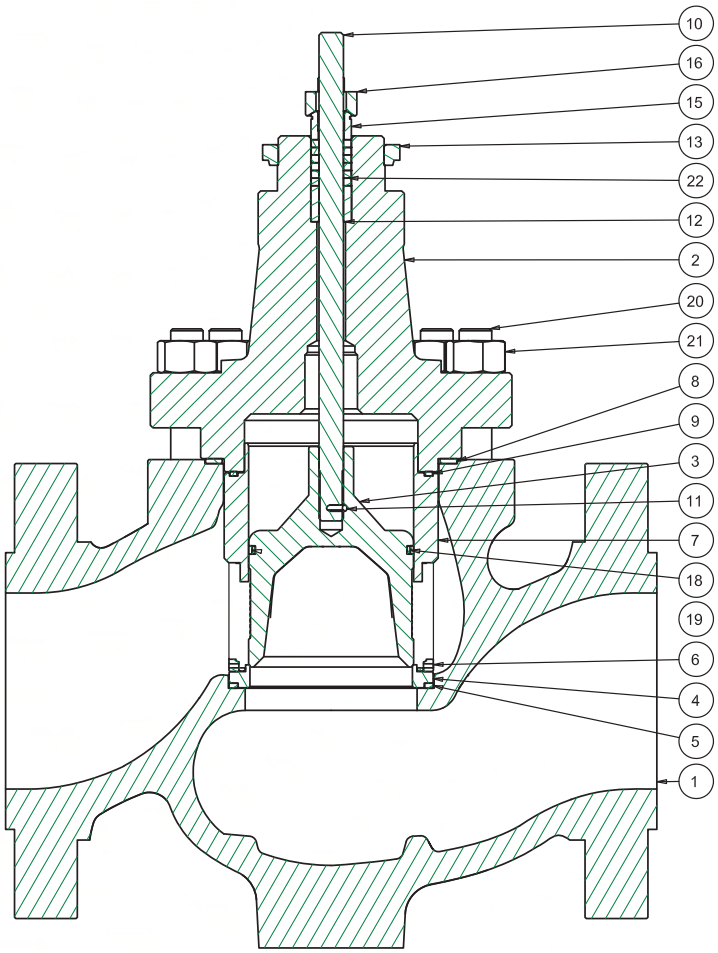

ITEM	PART NAME
1	BODY
2	BONNET
3	PLUG
4	SEAT RING
5	SEAT RING GASKET
6	COVER CAGE
7	CAGE
8	BODY GASKET
9	CAGE GASKET
10	STEM
11	PLUG PIN
12	GUIDE BUSHING
13	DRIVE NUT
14*	PACKING FLANGE STUD
15	PACKING FOLLOWER
16	PACKING FLANGE
17*	PACKING FLANGE NUT
18	INTERNAL SEAL RING
19	EXTERNAL SEAL RING
20	VALVE BODY STUD
21	VALVE BODY NUT
22	PACKING

*: Not Shown

Size, Rating and Connection:

Flanged (RF,RTJ,T&G,FF): 3/4”-14” , ANSI 150-2500 / 16”-24” , ANSI 150-1500

Welded: SW: 3/4”-2” , ANSI 150-2500 / BW: 3/4”-16” , ANSI 150-2500 / 16”-24” , ANSI 150-600

Body Materials:

Carbon Steel

Stainless Steel

Super-alloy

Actuators:

Model DS Spring Diaphragm

Model DM Multi Spring Diaphragm

Model PS & PD Cylinder

Trim:

Single Stage (Anti-noise and Anti-cavitation)

Multi- Stage (Anti-noise and Anti-cavitation) or VRT

Characteristic:

Standard: Linear or Equal%

Anti-cavitation/Anti-noise: Linear

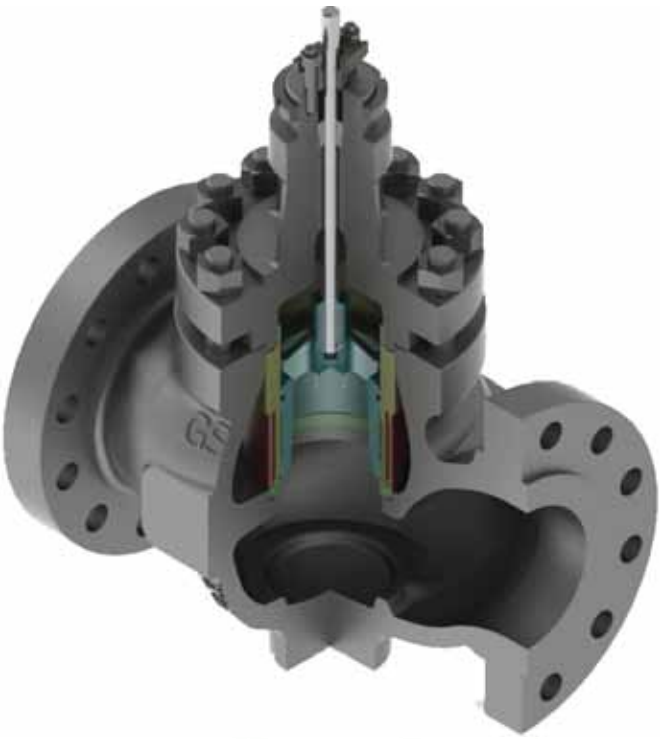

Applicable Trims on CG Series:

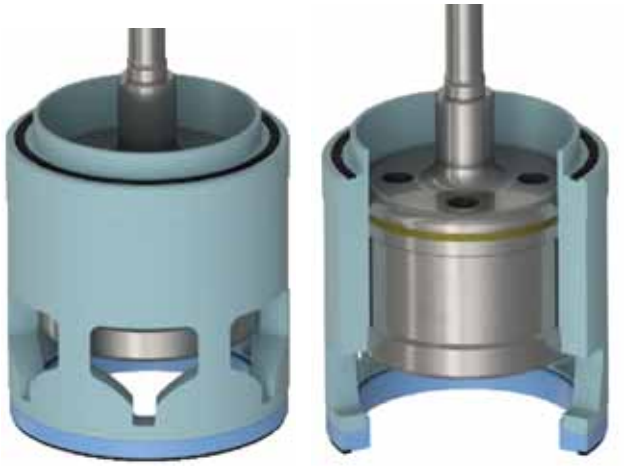

Standard Cage:
Linear, Equal Peresentage, Quick Opening



Lo-dB / Anti-Cavitation
Single Stage:
Linear, EQ%

Lo-dB / Anti-Cavitation
Multi Stage:
Linear



Lo-dB Single Stage with diffuser Cage:
Linear, EQ%
Linear, Equal Peresentage, Quick Opening



Anti-Cavitation
MultiStage:
Linear
Linear, Equal Peresentage, Quick Opening



Variable Resistance Trim (VRT):
Linear

Typical Applications:

* HP heaters drains
* Moisture separator drains
* Feed tank supply
* Main feedwater valves
* Turbine Bypass
* Bypass to Atmosphere
* Steam Turbine
* Condenser
* Cooling Tower
* Reactor Building
* Turbine Building
* Reactor Facility Grounds & BOP
* Heat Recovery Steam Generator
* Balance Of Plant
* Distillation
* Hydro processing
* Reforming
* Cracking
* Blending
* Quenching & Fractioning
* Charge Gas Compression
* Separation
* Refrigeration
* Dehydration
* Refrigeration
* Liquefaction

Control Valves LG Series

LG series control valves offer excellent control of liquid services with high pressure drops , and entrained particulate. The dirty service anti-cavitation trims feature multi-stage protection against damaging effects of cavitation and erosive solids. Suitable for Pump Minimum Flow service.

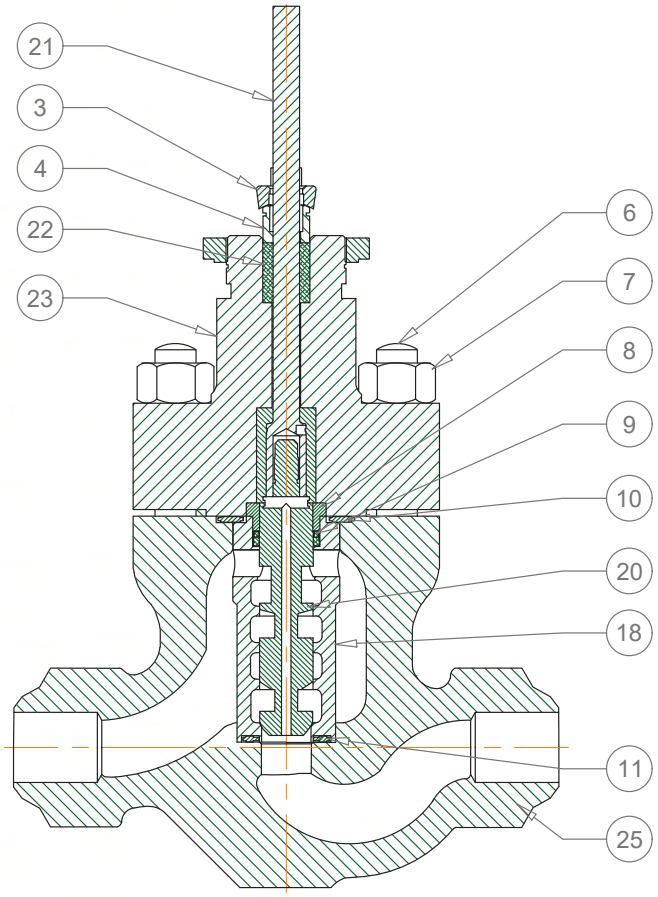

Item	Part Name
1*	Packing Flange Stud
2*	Packing Flange Nut
3	Packing Flange
4	Packing Follower
5*	Drive Nut
6	Body Stud
7	Body Stud Nut
8	Seal Retainer’
9	Seal and Seat Backup ring
10	Body Gasket
11	Seat Ring Gasket
12*	Plug Pin
18	Liner with Integral Seat
19	Seat Ring
20	Plug
21	Stem
22	Packing
23	Valve Bonnet
25	Valve Body

*: Not Shown

Size, Rating and Connection:

Flanged (RF,RTJ,T&G,FF): 1”-8” , ANSI 300-2500

Welded: SW: 1”-2” , ANSI 300-1500 / BW: 1”-8” , ANSI 300-2500

Screwed: 1”-2” , ANSI 300-600

Body Materials:

Carbon Steel

Stainless Steel

Super-alloy

Actuators:

Model DS Spring Diaphragm

Model DM Multi Spring Diaphragm

Model PS & PD Cylinder

Trim:

Multi step axial flow (3, 4, 6, 8 and 10 stages)

Characteristic:

Standard: Linear

Optional : Mod. Equal



Multi-Stage, Axial Flow Technology

High trim velocity can intensify cavitation damage inside the control valve. This damage is common in many single-stage valve designs, which take the full pressure drop across a single region within the trim. This single region is typically the leading edge of the plug and seat — an area that experiences the highest velocity. Consequently, it receives the most severe and excessive damage. GSSE LG series available in Balance as well as Unbalanced Trim.



Dirty Service Support

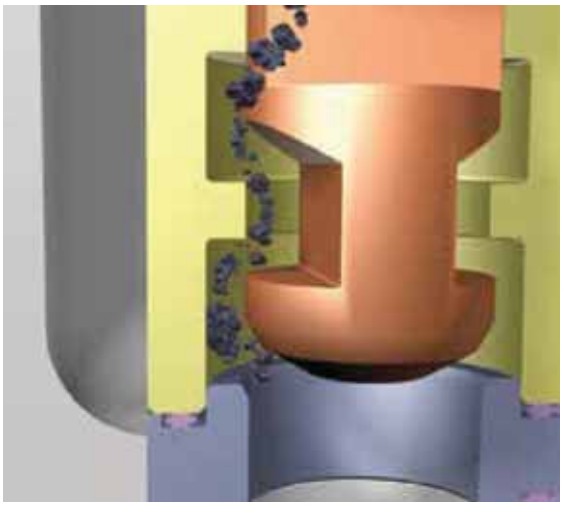

Cavitation Elimination

The multi-step flow path created by the LG series trim design, reduces the pressure drop in multiple stages without allowing the local pressure to drop below the fluid vapor pressure thus preventing cavitation. active stages throttle in unison to avoid taking the full pressure drop across any individual stage.

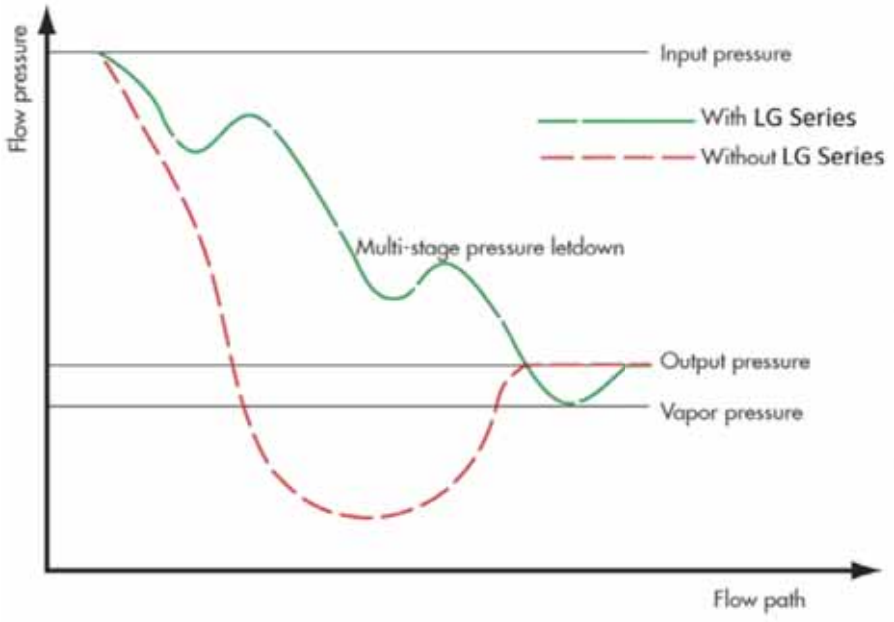

Simplified diagram of simple and multi-stage pressure letdown

Specific Applications:

* Pump recirculation
* High-pressure liquid letdown applications,
* Especially for dirty fluid conditions.

Features:

* Multi Stage Trim (Anti Cavitation, Anti Noise Trim)
* Dirty Service Support
* Long Trim Life By Protected Seat Design
* Reliable Tight Shutoff (Metal & Soft Seat Design)
* Heavy Plug Guiding
* Angle Type Body Construction available

Control Valves MF Series

MF series designed specifically for low flow applications, the micro flow series provides excellent throttling control performance with a wide range of options and capabilities. Design optimization has also resulted in an extremely integrated and compact assembly.

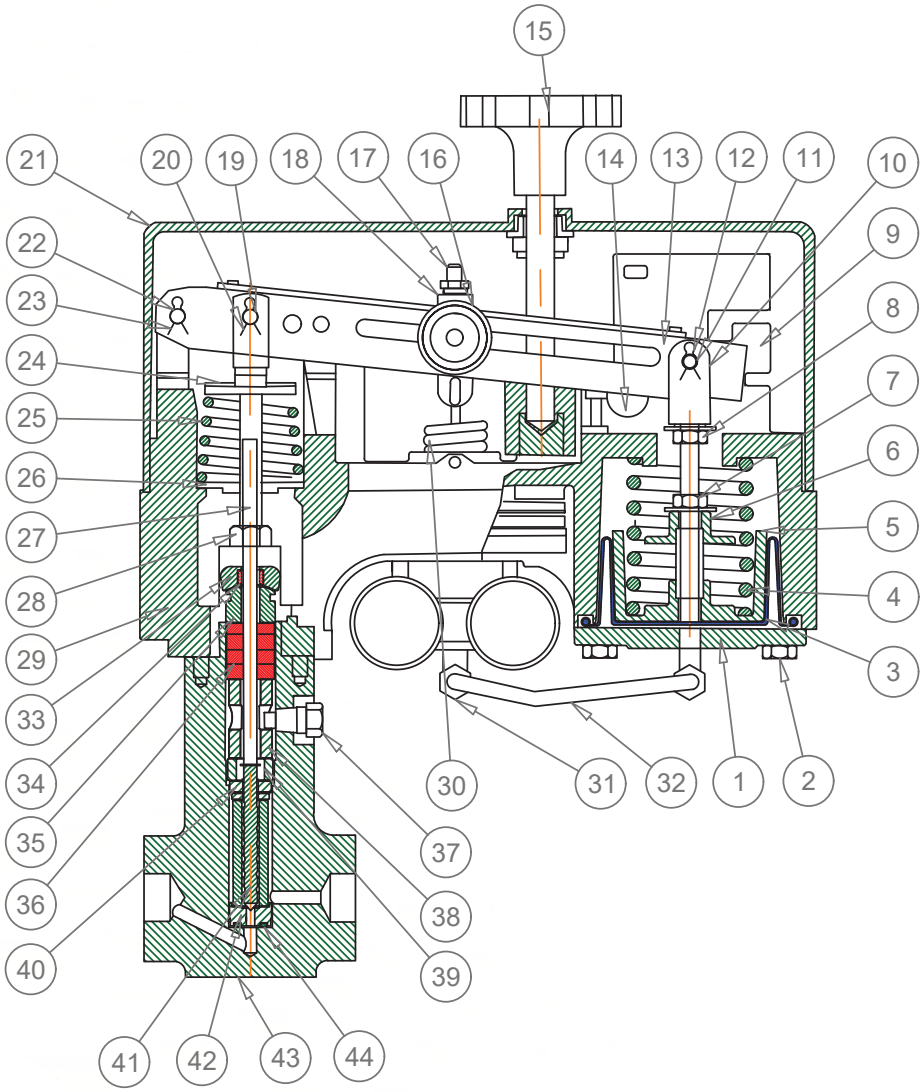

Item	Part Name
1	Diaphragm Cover
2	Cover Cap Screw
3	Diaphragm
4	Spring
5	Diaphragm Plate
6	Limit Stop
7	Lock Nut
8	Lock Nut
9	Indicator
10	Yoke
11	Pivot Pin
12	Clip
13	Arm
14	Cover Plug
15	Adjusting Wheel
16	Internal Ad. Wheel
17	Adjusting Screw
18	Link
19	Pivot Pin
20	Clip
21	Cover
22	Pivot Pin
23	Clip
24	Spring Button
25	Conical Spring
26	Spring Plate
27	Stem
28	Nut
29	Main Body
30	Balancing Spring
31	Union Elbow
32	Tubing
33	Packing Flange
34	Mounting Nut
35	Packing Follower
36	Packing Ring
37	Safety Pin
38	Packing Spacer
39	Seat Ring Retainer
40	Retaining Ring
41	Plug Stem
42	Seat Ring
43	Valve Body
44	Seat Ring Gasket

Size, Rating and Connection:

Flanged: 1/2”-1” , ANSI 150-1500

Welded: SW: 1/2”-1” , ANSI 150-1500 / BW: 1” , ANSI 150-1500

Screwed: 1/2”-1” , ANSI 150-1500

Body Materials:

Stainless Steel

Super-alloy

Actuators:

Spring-opposed rolling diaphragm

Trim:

Contoured, heavy top guided

Characteristic:

Standard: Linear

Cv Range:

0.0016 to 3.8



Trim Construction:

Bull Plug

Multi Stage

Trim Material:

Stainless Steel

Duplex

Solid Stellite

Other Important Features

Standard Flangeless Design

Anti-Cavitation Trim Design

High Pressure Design

Bellows Seal Design :

For applications that require zero leakage at the packing box, the MF valve is available with a Bellows seal. This design is ideal for applications that involve the handling of flammable, toxic, or explosive fluids.

Cryogenic Design



The MF multi-stage trim design for the this control valve provides unmatched anti-cavitation performance in low flow applications.

By reducing erosion and vibrations, this design helps minimize failure that is often associated with conventional single-seated valves. This trim is available with the standard body designs in either the flanged or flangeless con-figurations.

Adjustable Flow Coefficient (CV)

With the valve's adjustable Cv option, you can easily accommodate changing operating conditions. The Cv value can be increased or decreased simply by setting a knob within the actuator assembly .

Design Flexibility

Other standard configurations include a high-pressure ASME Class 2500 design, a zero-emissions Bellows seal design, and a design for cryogenic applications. The MF valve is also avail-able with an angle body design to accommodate existing piping configurations.

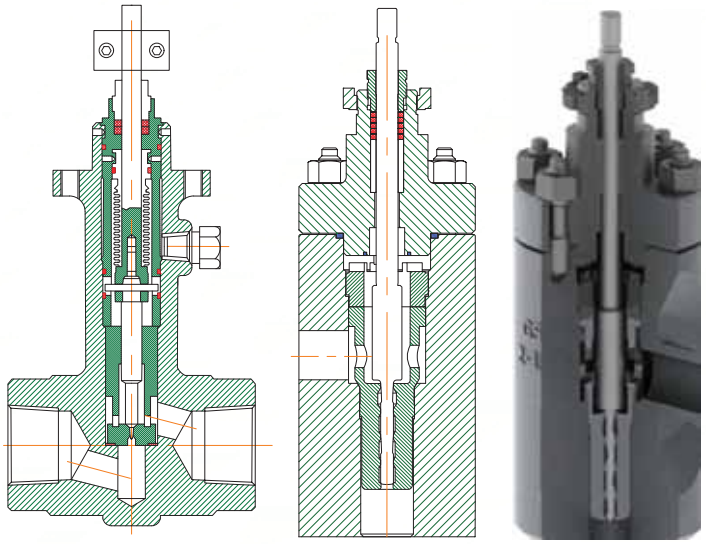

Specific Applications:

- Microflow applications
- Waste treatment plant
- Cooling Tower
- Primary pump cleaning injection
- Effluent treatment system
- Gas Turbine



Control Valves DP Series

The DP series double ported control valves Construction features have been carefully selected to provide optimum performance. The concept of the top and bottom guided double seated design helps to improve the rigidity of the valve at higher flow rates and pressure drops.

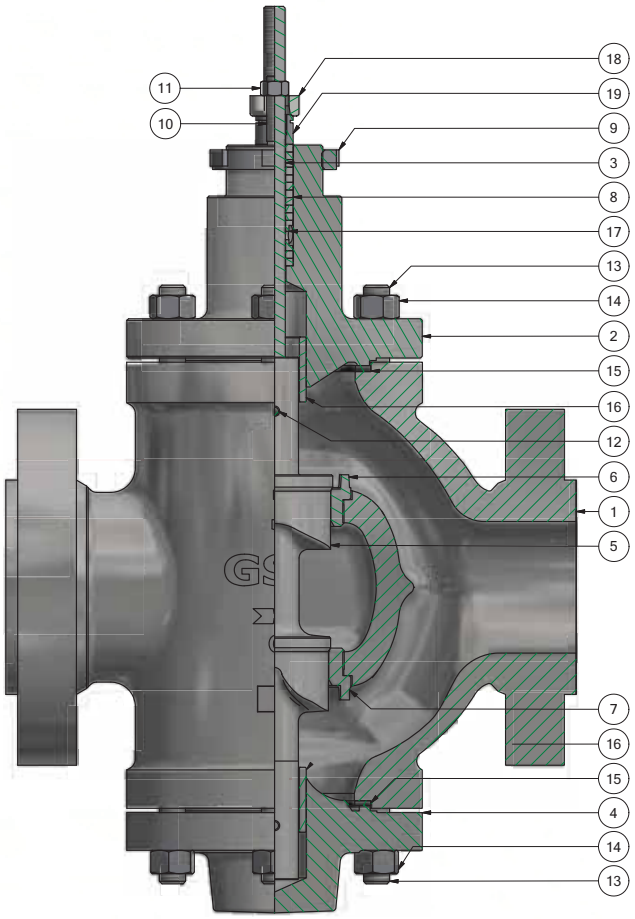

ITEM	DESCRIPTION
1	Body
2	Bonnet
3	Stem
4	Blind Flange
5	Plug
6	Upper Seat Ring
7	Lower Seat Ring
8	Packing
9	Drive Nut
10	Packing Flange Stud
11	Packing Flange Nut
12	Plug Pin
13	Body Stud
14	Body Nut
15	Body Gasket
16	Guide Bushing
17	Packing Spacer
18	Packing Flange
19	Packing Follower
20*	Bonnet Plug

*: Not Shown

Size, Rating and Connection:

Flanged (RF,RTJ,T&G,FF): 2”-12” , ANSI 150-1500 / 14”-24” , ANSI 150-600

Welded: SW: 3/4”-2” , ANSI 150-2500 / BW: 3”-12” , ANSI 150-1500 3”-10” , ANSI 150-2500

Screwed: 3/4”-2” , ANSI 150-600

Body Materials:

Carbon Steel

Stainless Steel

Super-alloy

Actuators:

Model DM Multi Spring Diaphragm

Model PS & PD Cylinder

Trim:

Double Seat, V-Port Or Contoured, Elastomer seat version for high leakage class.

Anti-noise trim for Steam management.

Characteristic:

Standard: Linear or Equal% or Quick Opening

Anti-cavitation/Anti-noise: Linear



Features:

The DP Series double seated control valves are semi-balanced designs, providing high allowable pressure drops, reduced actuator thrust requirements, and large flow areas to effectively handle dirty fluid applications. Standard features include:

Enhanced Performance and Reliability

Separate top and bottom guides in the GSSE DP Series provide heavy duty plug and stem support throughout the valve stroke range. This results in excellent throttling control characteristics and high product reliability.

High Pressure Drop Capability

The DP Series offers a semi-balanced trim construction, which allows for application in higher pressure drop applications using standard actuation. This also helps to reduce product complexity and overall assembly size and weight.

Dirty Service Design

Large flow areas within the DP Series design, makes it an excellent choice for applications involving dirty fluids. Foreign particles can pass through the valve without negatively affecting control performance.

Easy Field Maintenance

The DP Series is designed for top and bottom entry, allowing for quick access to the key trim and soft good components. This also permits easy access to the top and bottom guides for repair or replacement.

Reduced Emissions

The DP Series can be supplied with the GSSE Low-E Packing design to provide low emissions performance

Applicable Trims on DP Series:



Typical Applications:

* Safety Injection Applications
* High Pressure Dorp while dirty Service
* Hydrocarbon processing applications
* Distillation
* Reforming
* Blending
* Quenching &Fractioning
* Charge Gas Compression
* Separation.

Control Valves RG Series

A heavy duty Rotary Globe control valve with Eccentric plug , excellent solution for high viscosity fluid application.

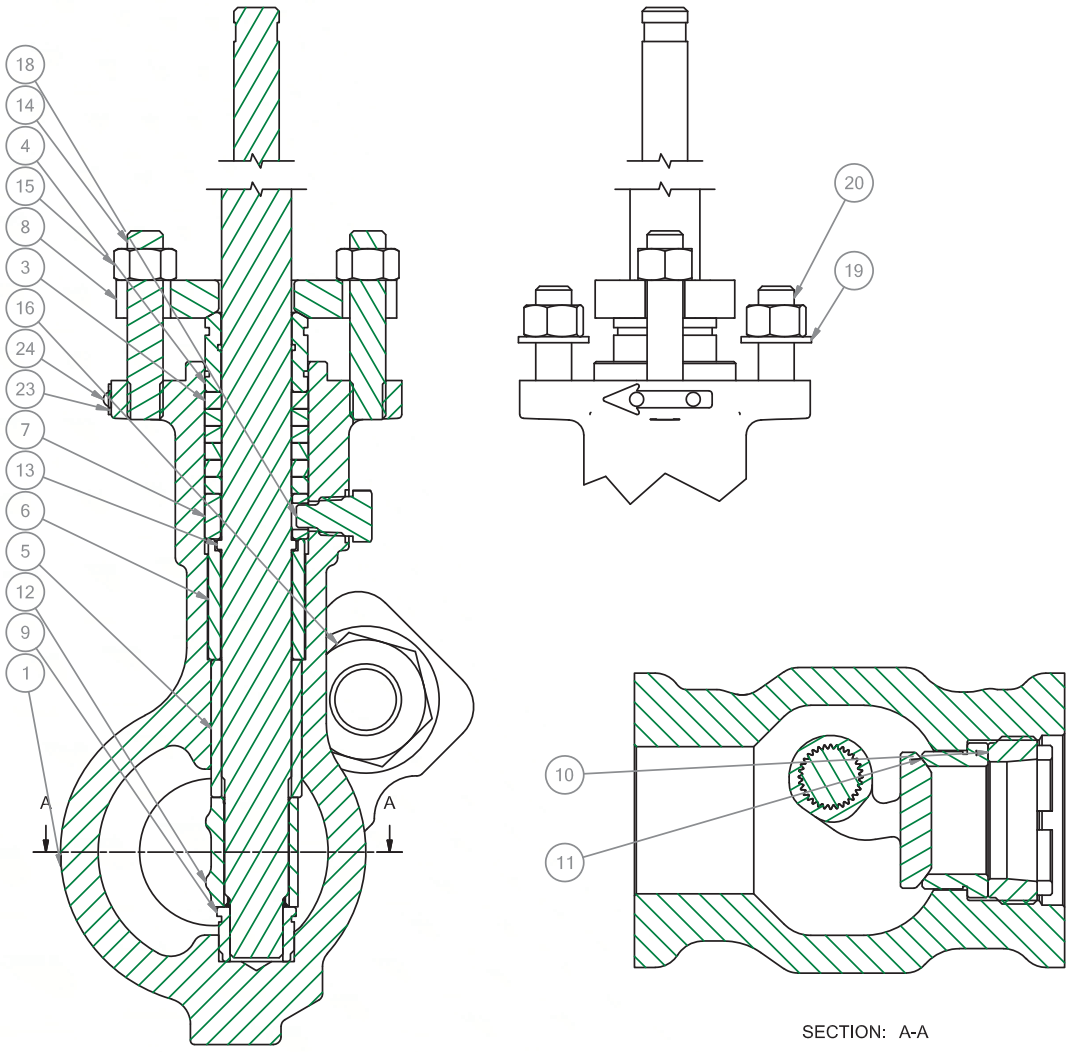

SECTION: A-A

ITEM	PART NAME
1	Body
2	Rotary Actuator - Range: 7-15 psig
3	Packing
4	Packing Follower
5	Upper Guide
6	Spacer
7	Packing Box Ring
8	Packing Flange
9	Lower Guide
10	Retainer
11	Seat Ring
12	Plug
13	Stem
14	Packing Flange Stud
15	Hex Nut
16	Washer
18	Safety Pin
19	Washer
20	Body Stud
21	Retaining Ring
22	Ball Bearing
23	Arrow
24	Rivet

Size, Rating and Connection:

Flanged : 1”-12” , ANSI 150-600

Flangeless (Mounting Between Flanges): 1”-12” , ANSI 150-300

Body Materials:

Carbon Steel

Stainless Steel

Super-alloy

Actuators:

Model DM Spring Diaphragm

Trim:

high capacity contoured plug

Characteristic:

Equal%



Features:

- The flangeless body rating is a rugged ASME Class 600.
- Heavy-duty guide lugs assure quick, positive alignment during installation.
- The flanged version is available in 1 in. through 12 in. (25 mm through 300 mm) sizes in 150 or 300 ASME, and 1 in. through 8 in. (25 mm through 200 mm) in 600 ASME.
- The optional GR (Globe Replacement) version is available in 1 in through 6 in. sizes (25mm through 150mm) in ASME Class 150, 300, and 600 ratings and allows direct replacement of conventional reciprocating globe valves.
- Separable bonnet design is available.
- Straight through flow pattern provides greater flow capacities.
- Standard integral extension bonnet allows for a wide range of fluid temperature applications (-320° F to 750˚ C),(-196˚ C to 400˚ C).

* The unique self-aligning eccentric rotating plug provides tight shutoff and low dynamic forces.

- A large variety of reduced-trim options are available in all sizes.
- The triple, over-sized bearing system provides exceptional plug shaft guiding.
- The shouldered shaft design provides robust blowout prevention.
- An optional differential velocity device (DVD) separates compressible flow streams into a high velocity core and a low velocity envelope flow stream. This provides up to 18 dBA noise attenuation.
- Optional alloy constructions are available.
- The powerful, low-profile, spring-diaphragm actuator guarantees positive fail-safe action.
- Splined shaft and actuator linkages, combined with low-friction techniques, contribute to reduced dead band and hysteresis.
- The valve position indicator is large and highly visible.

* The actuator linkage (purge option available) is totally enclosed).
* Dirty Service Support for viscose fluid





Specific Applications:

* Low pressure heaters drain
* Ventilation system
* Aggressive acids Service
* Hydrofluoric and sulfuric acid applications.
* Sludge & solid particle content service

Control Valves

SB Series

A heavy duty ball control valve with parabolic segment ball, excellent solution for high viscosity fluid application.

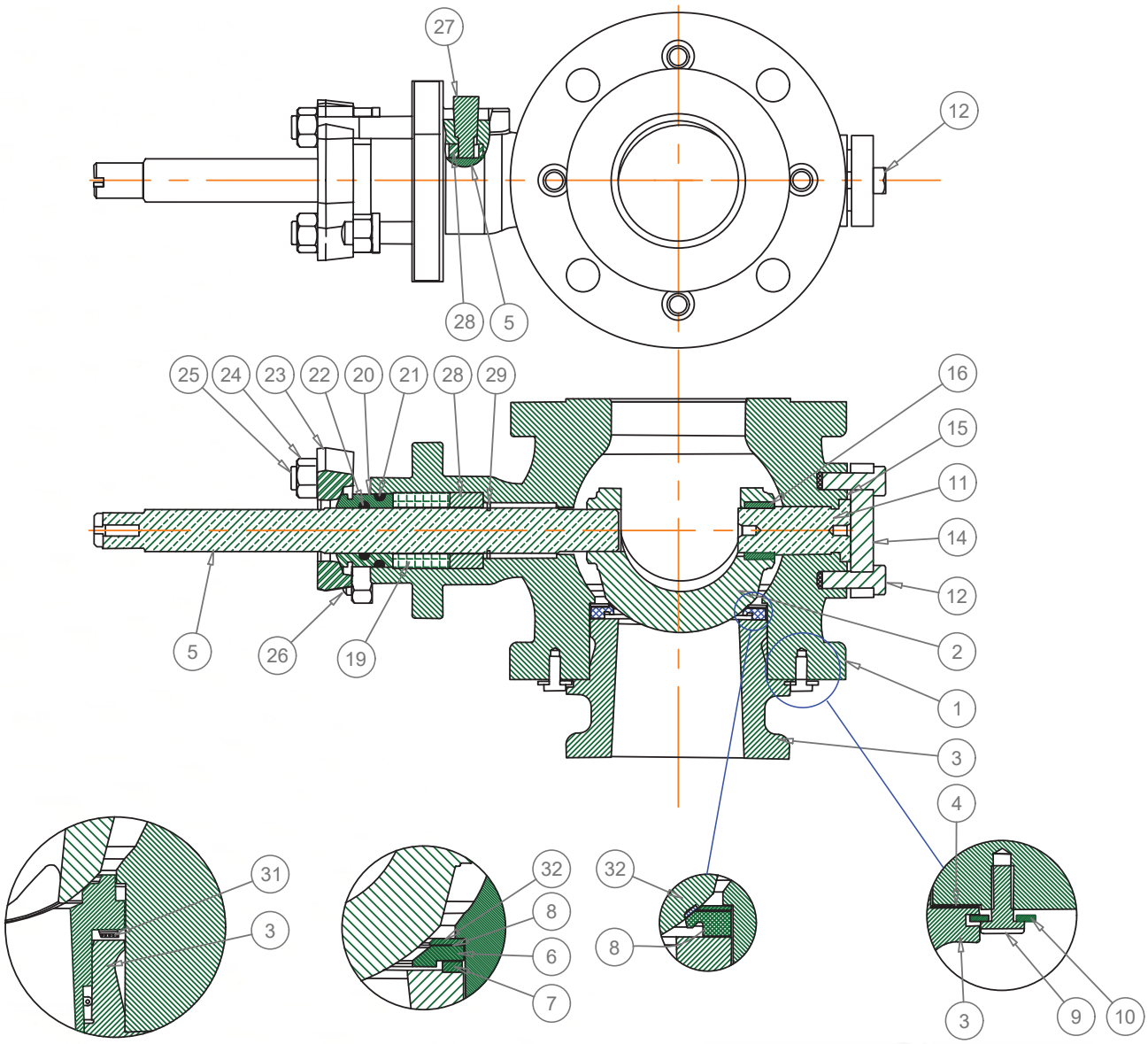

Size, Rating and Connection:

Flanged : 1”-12” , ANSI 150-300

Flangeless (Mounting Between Flanges): 1”-12” ,

ANSI 150-300

Body Materials:

Carbon Steel

Stainless Steel

Super-alloy

Actuators:

Model DM Spring Diaphragm

Trim:

high capacity “V” contoured segmented ball

Characteristic:

Equal%



ITEM	PART NAME
1	Body Flanged
2	Ball Plug
3	Retainer Standard (ISA S75.04)
	Retainer Extended (ASME B16.10)
4	Gasket (retainer body)
5	Stem Shaft
6	Backup Ring (flat metal seat)
7	Gasket (flat metal seat)
8	Seat Ring Flexible Metal
	Seat Ring
	Seat Ring Heavy Duty Rigid
9	Slot Button Head Screw
10	Flat Washer
11	Pin Shaft
12	Cap Screw, End Flange
14	End Flange
15	Gasket Pin Shaft
16	Lower Bushing
17	Upper Bushing
19	Packing Set
20	Packing Follower
21	O-Ring
22	O-Ring
23	Packing Box Flange
24	Nut, Packing Flange Stud
25	Stud, Packing Flange
26	Stud, Bonnet
27	Safety Pin
28	Packing Adapter
29	Shaft Ring
30	Radial Seal, HD Seat
31	Wave Spring, HD Seat
32	Seat Support Ring, Downstream

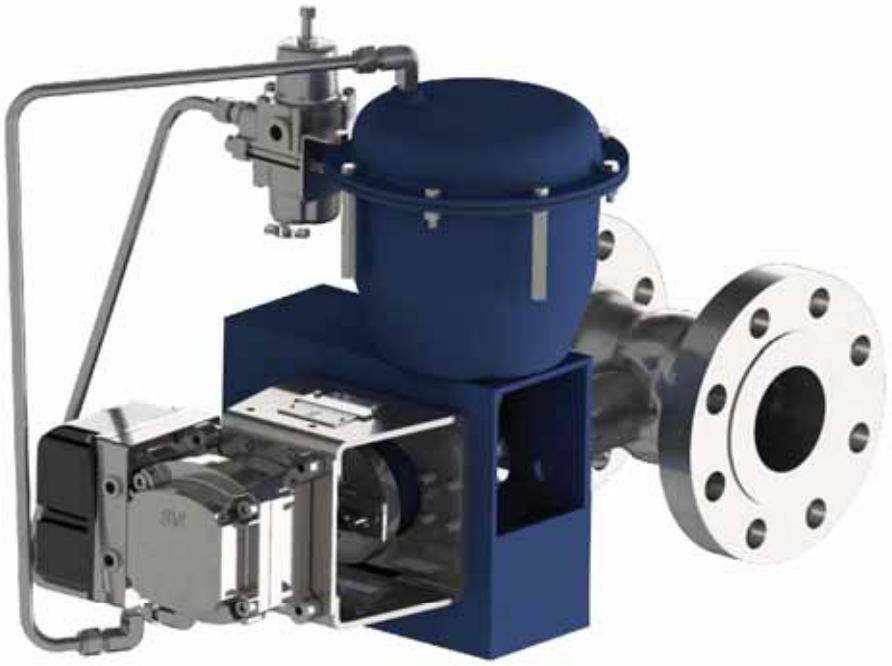

SBV/NC Trim option! The valve's application can now range from very low-flow and high accuracy service. This is ideal for additive and coloring lines and pilot plants. Cavitation and aerodynamic noise is also reduced. This Trim is a self-cleaning design which handles contaminated flows without plugging.



Option

The SB/NC Trim option can help with liquid cavitation and aerodynamic noise problems. The pressure drop is divided into a series of small pressure drops and separates the flow stream into many small jet streams. This provides a combination of cavitation/noise abatement with high capacity, high rangeability and the capability to handle impure fluids.

Specific Applications:

* Low Pressure Steam
* Medium Pressure Steam
* Molecular sieve
* Hydrogen service
* Emergency Shut down
* Hot oil installations
* Gas dehydration and regeneration
* Critical and Lethal service
* Cryogenic service
* Sand slurry
* Frequent cycling service



Control Valves NABA Series

Multistage Cage Ball

Heavy duty automatic throttling control ball valve for Surge Control. Available in segment ball and full ball type.

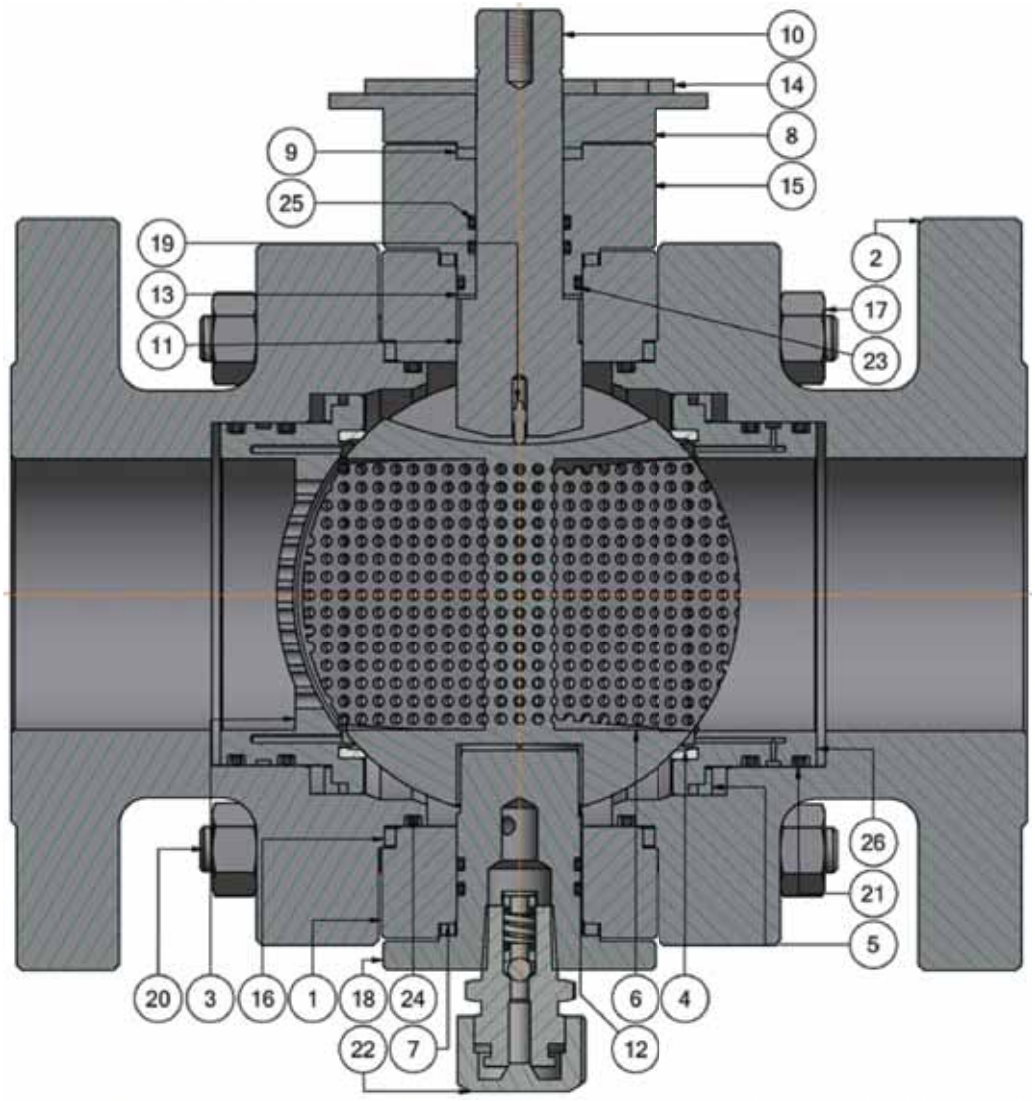

ITEM	PART NAME
1	Body
2	Closure
3	Drilled Seat Ring
4	Seat Insert
5	Seat Follower
6	Ball
7	Gasket
8	Top Flange
9	Gasket
10	Stem
11	Stem Bearing
12	Trunnion Bearing
13	Thrust Washer
14	Stop Plate
15	Gland Cap
16	Body Gasket
17	Body Nut
18	Bottom Flange
19	Grounding Plunger
20	Body Bolt
21	O-Ring
22	Vent Valve
23	O-Ring
24	O-Ring
25	O-Ring
26	Seat Ring

Size, Rating And Connection:

2”-42” ,ANSI 150 - 4500

API Rating: 2000 to 7500 psi

Intermediate ratings also available

Body Materials:

Per Customer Requirements

Carbon Steel, Stainless Steel, Monel, Inconel, Hastelloy

Actuators:

GSSE Model DS Pneumatic Spring Diaphragm

GSSE Model PS Pneumatic Spring Cylinder

GSSE Model SY Pneumatic Scotch Yoke

GSSE Electrohydraulic

Electro-Gearbox

Seat Design:

Standard:

Single upstream metal seat

Optional:

Polymeric double seat for Double Block and Bleed

Trim:

Segment, V port, Special

Characteristic:

Modified Linear, Modified Equal Percentage

Temperature Range:

-29° C to 250° C

(-20° F to 482° F)

Options:

- Ball expansion for multi-phase service
- Bi-directional flow
- Extended stem for buried service
- Low-emission stem seal design according to ISO test standards
- Special trim for low and high temperature service
- Expanded end connections to match piping size
- Fire safe approved

Features:

Superior Flow Capacity

GSSE Ball valve offers superior flow capacity compared to cage style valves. GSSE features a control trim design that permits less restriction and greatest capacity when demand requires.

Aggressive Noise Attenuation

We provides the maximum noise attenuation of Ball Valve range. The multi-stage trim design dissipates kinetic energy by forcing the fluid through a series of pressure reducing holes and angles. This frictional path decreases velocity and vibration – providing up to 25 dB of noise attenuation.

Wide Controllability

Natural gas systems often call for control of a wide range of flow rates. Rotary design offers high turndown ratio (200:1) for excellent control range. A wide flow range can be controlled by a single run where cage style valves require multiple runs and valves.

Minimize Emissions

The rotary quarter turn design of our Ball valve provides quick, easy and low impact automation. The constant linear motion forces associated with globe and axial valves can cause damage to stem packing, releasing fugitive emissions.

The quarter turn design incorporates pressure seal seating technology that does not require excessive forces to ensure flow shutoff.

Compact Size

The high capacity NABA Ball design allows for the valve to be one or two sizes smaller than cage style valves. Not only does this reduce the station footprint, but less material and resources are required to support the valve.

Bi-Directional Control

Our design provides standard bi-directional flow capability without sacrificing control accuracy. This can reduce a system's assets up to 50% – cage style valves may require a valve and supporting materials for each direction.

High Pressure Differential

Through an aggressive multi-stage pressure let down design, is capable of handling pressure differentials over 1500 psi (104 bar). For extremely severe conditions, Stellite weld overlay can be applied to provide further erosion resistance.

Customized Configurations

Applications vary in service requirements. GSSE Ball valve can be configured in an array of exotic materials, ANSI class ratings, and end connections. Material selection is based on fluid composition and process conditions to maximize performance and service life. For the most aggressive

T Ball Model	TO	T1	T2	T3	T4	Attenujet
Noise Attenuation	Baseline	7 dBa	17 dBa	20 dBa	25 dBa	15 dBa

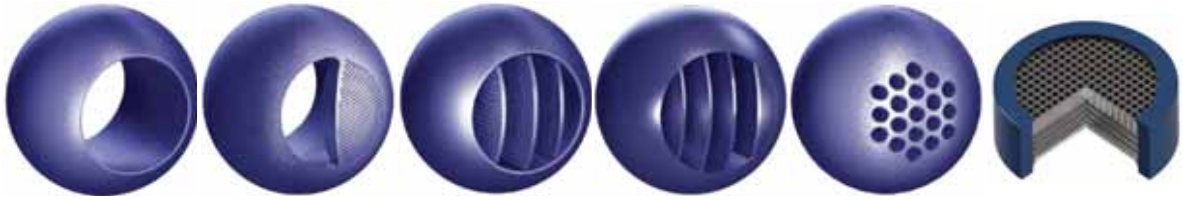

Typical Applications:

- Hydrocarbon Processing, Petrochemical, Power Generation and Pulp & Paper industries.
- Gases, Liquids and Steam, pure or impure.
- Flow and Pressure control in general & demanding services.
- Blow down.
- Flare control
- Pressure equalization.
- High temperature service.
- Tight shut-off requirements.



Control Valves BFD Series

High performance butterfly valve with one piece body , It is specially designed for industrial gas applications featuring long-lasting tight shut-off capability, excellent flow characteristics and long service life.

ITEM	PART NAME
1	Bearing
2	Bearing
3	Body
5	Cover
6	Disc
7	Disc Clamp
8	Disc spring
9	Drive shaft
10	Gland
11	Hexagon head screw
12	Hexagon head screw
13	Hexagon head screw
14	Hexagon head screw
15	Hexagon nut
16	Hexagon nut
17	Key
18	Locking plate
19	Packing (Female)-W
20	Packing (Male)-W
21	Retaining ring
22	Ring
23	Seal
24	Seal (Cover)
25	Sealing element
26	Sealing ring
27	Shaft
28	Stud
29	Thrust bearing
30	V Packing-W
31	Washer

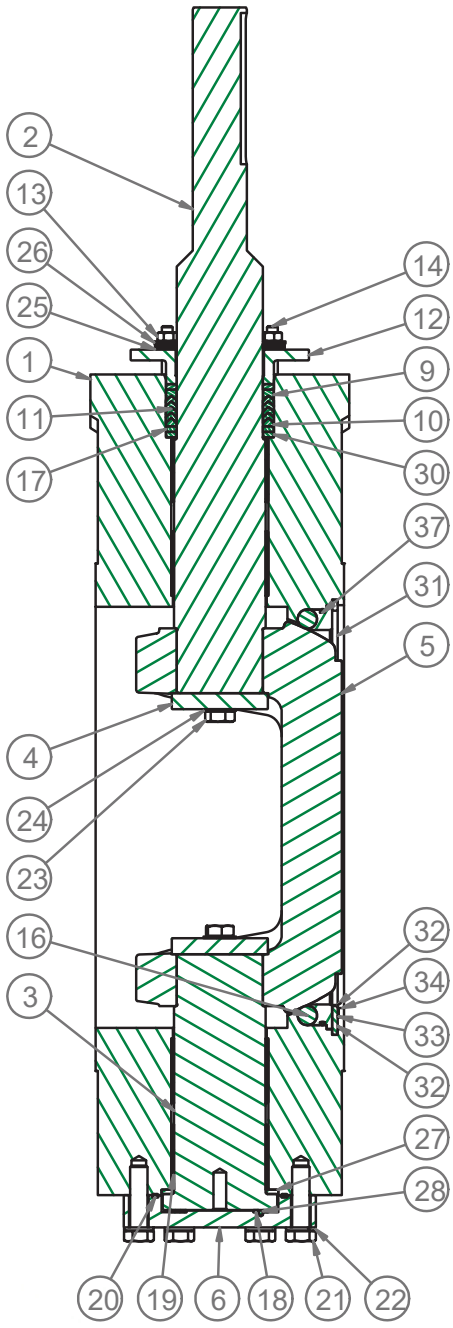

Function:	Control, shut-off
Body:	WCB A 216, Stainless Steel
	Duplex, Aluminum Bronze
Seat:	Soft Seat, Metal Seat
Size:	3 to 64 Inch
Body Connection:	Lug, Wafer, Double Flange
Temperature:	-16°C to 250 °C
Optional Features:	Fire Safe Design



Butterfly Valve different Types

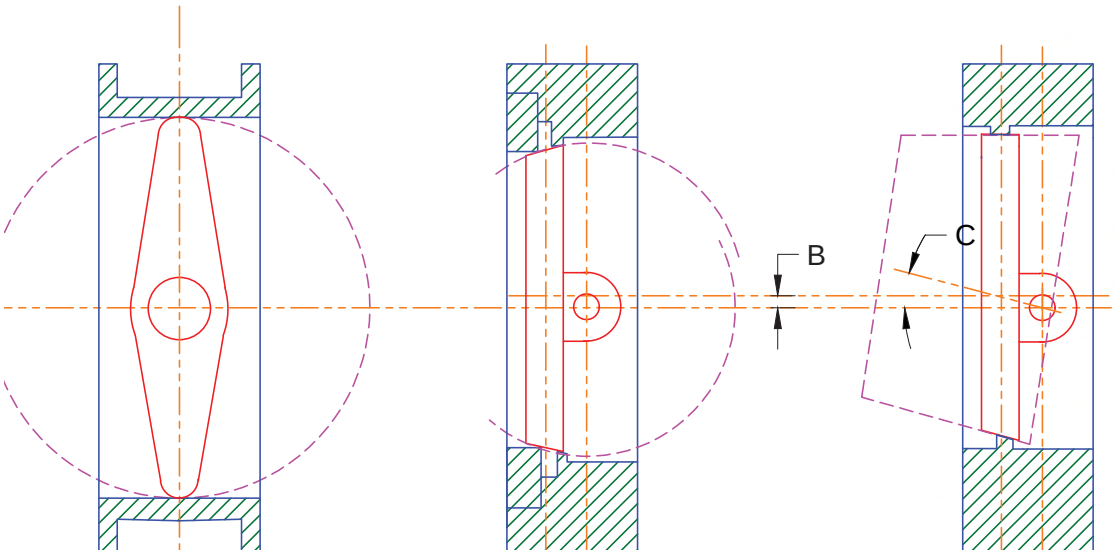

Concentric Butterfly Valve | Double Eccentric Butterfly Valve | Triple offset Butterfly

Butterfly valves are among the most popular industrial quarter-turn valves that control different fluid media flow-through systems. They come in different designs, offering varied advantages, such as the quarter-turn control, small dimensions for use in areas with limited space, and excellent control capabilities. They are also light, cheaper, and allow for a highcoefficient, making them useful in many applications **Centric or concentric butterfly valves**

Concentric butterfly valves are suitable for low-pressure applications. A concentric butterfly valve is the most basic type. The spindle passes through the centerline of the disc, located at the center of the pipe bore. The valve seat sits in the inside periphery of the valve body. The disc contacts the seat at around 85° during a 90° rotation. This design is known as resilient-seated because it relies on the rubber seat to efficiently seal the flow when closed.

Eccentric butterfly valves

Eccentric butterfly valves have the stem passing behind the disc's centerline, on the opposite side of the disc to the flow direction. These valves can be single-offset, double-offset, or triple-offset.

Single-offset: Stem is located right behind the centerline.

Double-offset: Referred to as doubly eccentric, these valves have the stem behind the disc with an additional offset to one side, enabling the disc to rub over the seat for only 1-3° of rotation during closure.

Triple-offset butterfly valve (TOV or TOBV): These are similar to double-offset valves, but the third offset makes these valves more efficient and resistant to wear and tear. GSSE BFD is a double eccentric butterfly Valve, manufactured in Soft Seated and Metal Seated Versions

Typical Applications:	**MEDIA**
Process	**Acids**
Sour Gas	**Alkali's**
Steam	**Corrosive Chemicals**
Vacuum	**Gases**
Water and	**Hydrogen**
Wastewater treatment	

The triple offset has been designed to support extreme service conditions, whether of high temperature or high pressure, the design has been developed in order to completely eliminate friction between the seat and the disc seal ring.

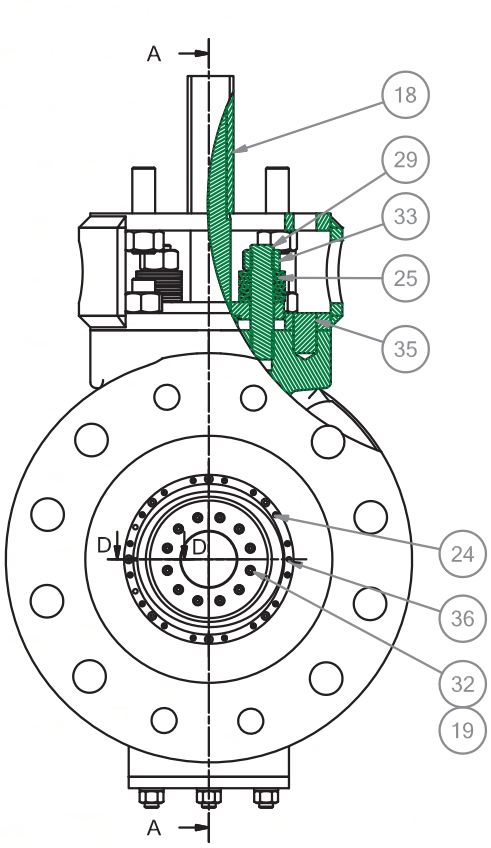

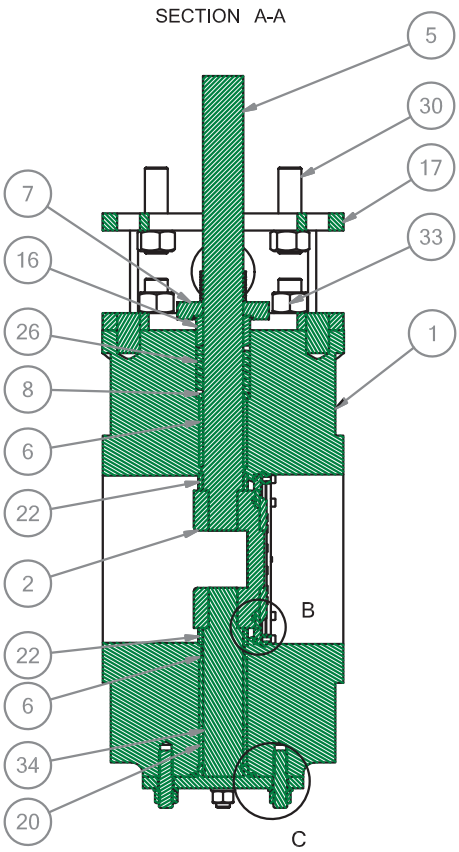

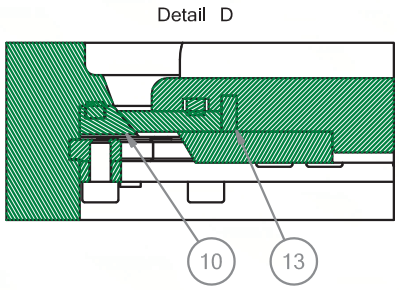

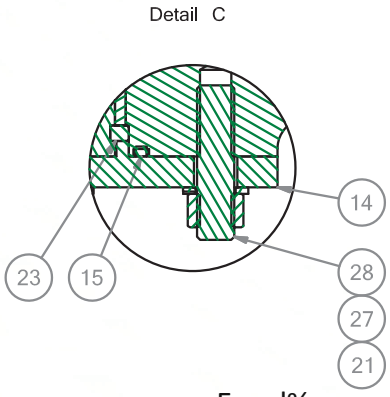

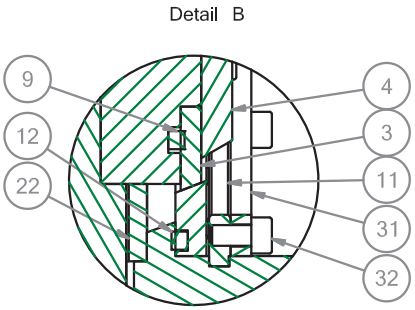

Size, Rating and Connection:

Size : 2”-48” , ANSI 150-1500

(Wafer, Lug, Double Flange, Butt weld)

Body Materials:

Carbon Steel

Stainless Steel

Super-alloy

Actuators:

Pneumatic, Hydraulic, Electric

Trim:

Soft Seat , Metal Seat , Laminated

Characteristic:

Equal%

Optional Tightness

ANSI Class V and VI

API 598

Temperature Range

-320°F to +1050°F (-196°C to +566°C)

Cv

10 to 100000

Other Size, Material and Pressure Ratings Available upon Request

Butterfly Valve different Types

ITEM	PART NAME
1	Body
2	Disk
3	Seal Ring
4	Disk Pressure Ring
5	Upper Stem
6	Sleeve (Body)
1	Gland Plate
8	Connect Ring
9	Gasket (Seal Ring)
10	Seat
11	Seat Retainer
12	Gasket (Seat)
13	Seal Ring Pin
14	Flange
15	Gasket (Flange)
16	Sleeve (Extention)
11	Yoke
18	Rectangular Key
19	Spring Washer (Disk Pressure Ring)
20	Spacer(Body)
21	Spring Washer (Gland)
22	Spacer(Disk)
23	Split Collar
24	Set Screw (Seat Retainer)
25	Disk Springs
26	Packing
27	Nut (Extention and Flange)
28	Stud bolt (Flange)
29	Stud bolt (Gland)
30	Stud bolt (Extention)
31	Seat Retainer Ring
32	Bolt (Disk Pressure Ring)
33	Nut (Gland)
34	Bottom Stem
35	Yoke Pin
36	Seat Retainer Pin

Features and benefits

Triple offset Geometry

Non-rubbing rotation of the segment resulting in less wear, longer life and Tighter shut-off

Zero Leakage-Bi-directonal

Class VI shut-off

Ease of maintenance

Only design that offers a filed replaceable seat and seal ring

Torque Seated design

Able to compensate for temperature and pressure flactuation

Resilient Metal Seat

Provide repeatable long term sealing performance

Flexibility of Design

Can be designed to unique requirements of application

Fire safe Design

No soft components in construction

Solid Proof Design

Including protection for bearings and sealing element

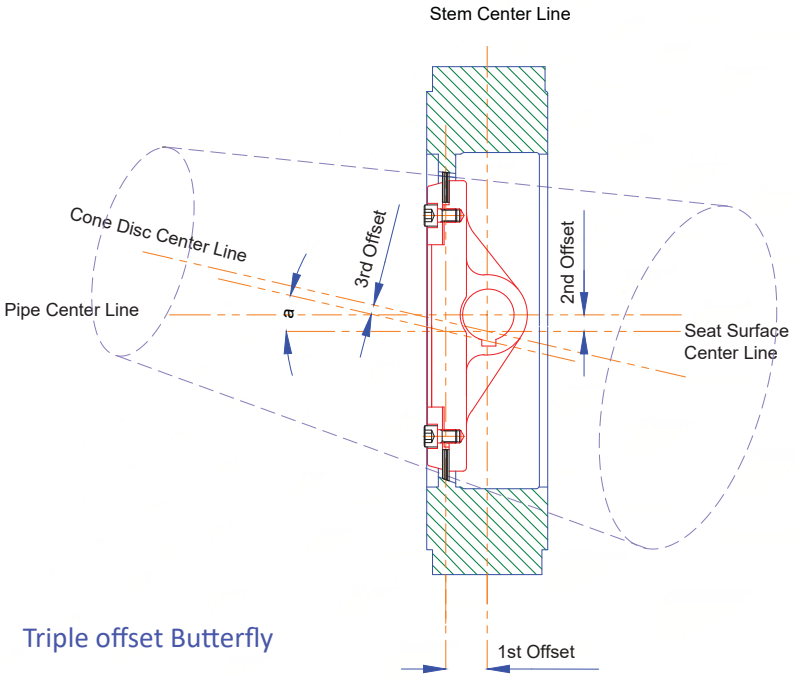

Triple offset Butterfly

Typical Applications:

- Process
- Sour Gas
- Steam
- Vacuum
- Water and
- Wastewater treatment

Media:

- Acids
- Alkali's
- Corrosive Chemicals
- Gases
- Hydrogen



Sever Service Control Valve

SF Desuperheater Configuration

Steam conditioning or desuperheater control valve.

We offer compact series and globe Type in cast and forged material .

This package is designed to manage steam condition by injection of water into passing steam

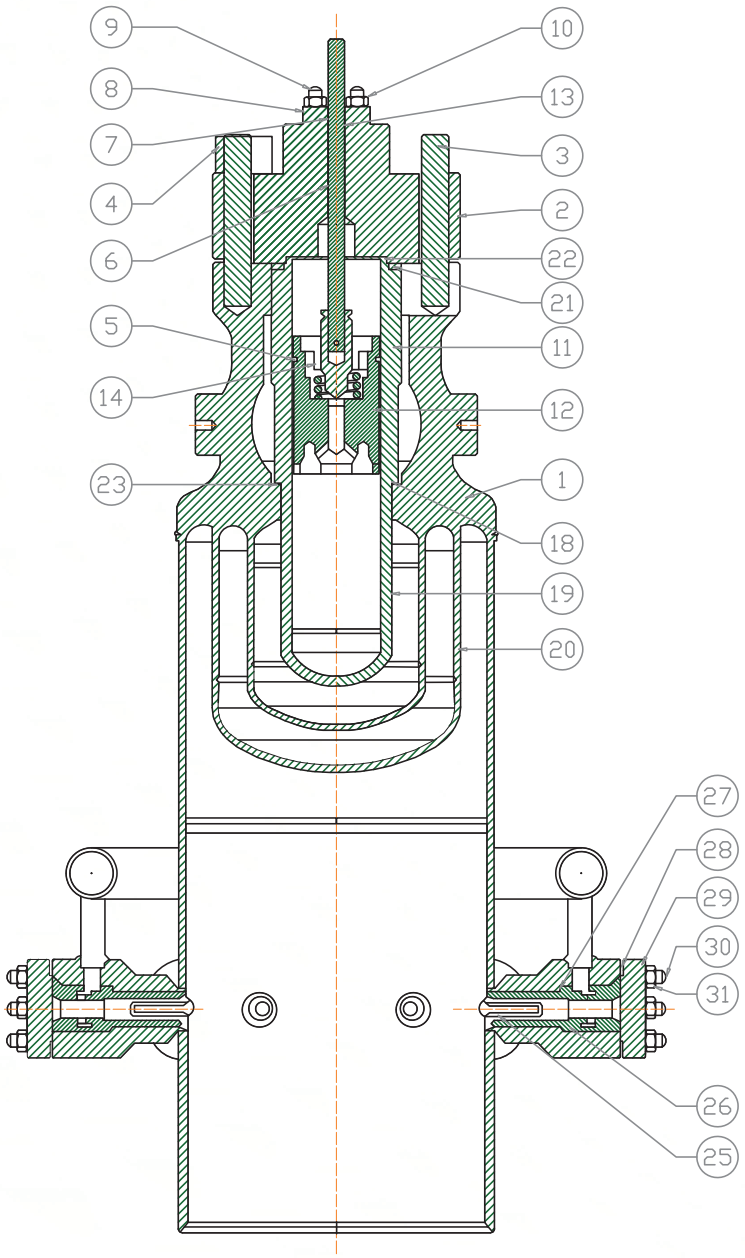

Item	Part Name
1	Body
2	Bonnet
3	Body Stud
4	Body Nut
5	Guide Bushing
6	Packing S/A
7	Packing Follower
8	Packing Flange
9	Packing Flange Stud
10	Packing Flange Nut
11	Cage
12	Plug
13	Pilot Spring
14	Auxiliary Pilot Plug
15	Retaining Ring
16	Stem
17	Grooved Pin
18	Seat Ring
19	Seat Ring Diffuser
20	Diffuser
21	Conical Spring
22	Body Gasket
23	Seat Ring Gasket
24	Seal Ring
25	Nozzle S/A
26	Nozzle Holder
27	Nozzle Gasket
28	Nozzle Flange Gasket
29	Nozzle Housing Flange
30	Nozzle Flange Stud
31	Nozzle Flange Nut
32	Flow profiler/Lo-dB plate

Size, Rating and Connection:

1”-48” ,ANSI 150-4500

Body Materials:

Carbon Steel

Stainless Steel

Super-alloy

Trim:

Contoured, Heavy Top Guided, Multi-staged Anti-cavitation

Characteristic:

Linear

Actuators:

Model DS Pneumatic Spring Diaphragm

Model PS Pneumatic Spring Cylinder

Model PD Pneumatic Double Acting Cylinder

Electrohydraulic

Electronic

Temperature Range:

648 °c

Body Construction:

Angle Type

Straight Globe

Spray Nozzle :

Solid Tungsten Carbide

Valve Design :

Flow to Close

Flow to Open

Features

The GSSE SF Series Steam Form steam conditioning valve combines years of successful experience in steam pressure control with the latest technological development in water injection and desuperheating. The Steam Form's unique design is engineered to provide the most efficient water vaporization and superior temperature control



High Performance Design

GSSE SF Series heavy-duty globe control valves are engineered to handle the most demanding process conditions and exceeds the capabilities of comparable designs. The cage guided design of the SF Series is structured for the severe service conditions and intermittent operation which is common in steam conditioning and turbine bypass applications. This construction allows for cyclical operation which accommodates large thermal transients.

Advanced Water Injection System

Tight Shutoff





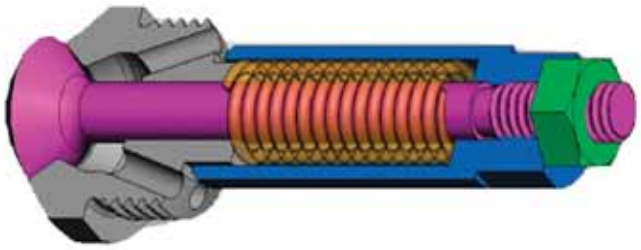



Specific Applications:

- Turbine bypass
- Process steam conditioning

Sever Service Control Valve

Tank Drain Control Valve TD Series

The GSSE TD Series is an erosive, flashing-resistant tank level control valve, designed with unique features for use in level control and tank drain applications with corrosive or viscous fluids prevalent in the PTA (Purified Terephthalic Acid) chemical industry. With High Pressure Drop, Sweep Angle Control Valve engineered Solutions for Corrosive and Erosive Severe Service Applications

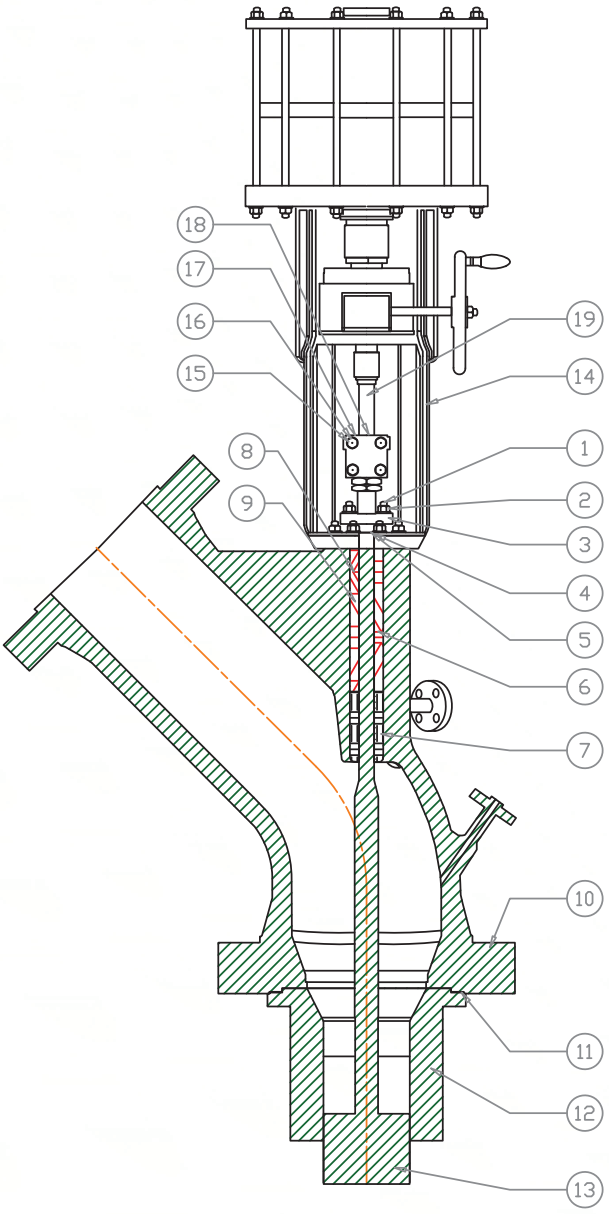

Item	Part Name
1	Packing Flange Stud
2	Packing Flange Stud Nut
3	Packing Flange
4	Packing Follower
5	Drive Nut
6	Packing
7	Guide Bushing
8	Lantern Ring
9	Lantern Ring
10	Body
11	Gasket
12	Seat Ring
13	Plug
14	Yoke
15	Stud
16	Nut
17	Indicator Arm
18	Split Clamp
19	Piston Rod

Also Available with 120° and 135° Configuration (135° Shown).

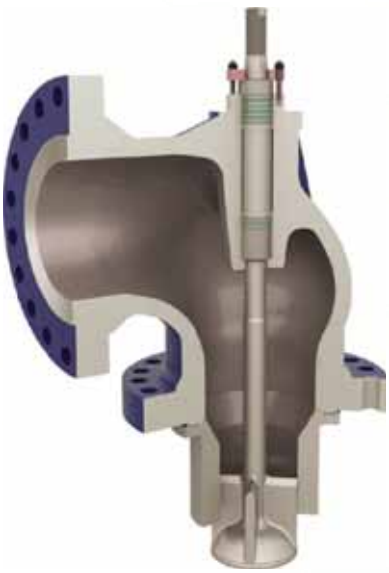



Specifications:

Flow Direction	
Contoured:	Flow-to-open/flow-to-close
Body	
Type:	Erosion resistance sweep angle
	90°, 120°, 135° sweep angle configurations
Bonnet	
Type:	Split body design, bottom entry trim access (No Separate Bonnet)
Body and Bonnet	
Materials:	316 Stainless Steel
	304 Stainless Steel
	Duplex Stainless Steel
	Titanium
	Hastelloy C
Trim	
Plug type:	Heavy Duty, Single Seat Plug
	1-piece Plug/Stem
	Guiding fins for vibration resistance
Seat ring:	Quick Change
	Single Seating Surface
Guide:	Heavy Top and Bottom Guided for increased stability and side loading
Cv ratio:	50:1
Flow characteristic:	Linear
Packing:	Wiper design for low friction throttling
Actuator	
Type:	Piston Cylinder (51/52/53)
Handwheel:	Optional Handwheel/Hand Jack
Additional Options	
	Flushing and purge ports to remove slurry

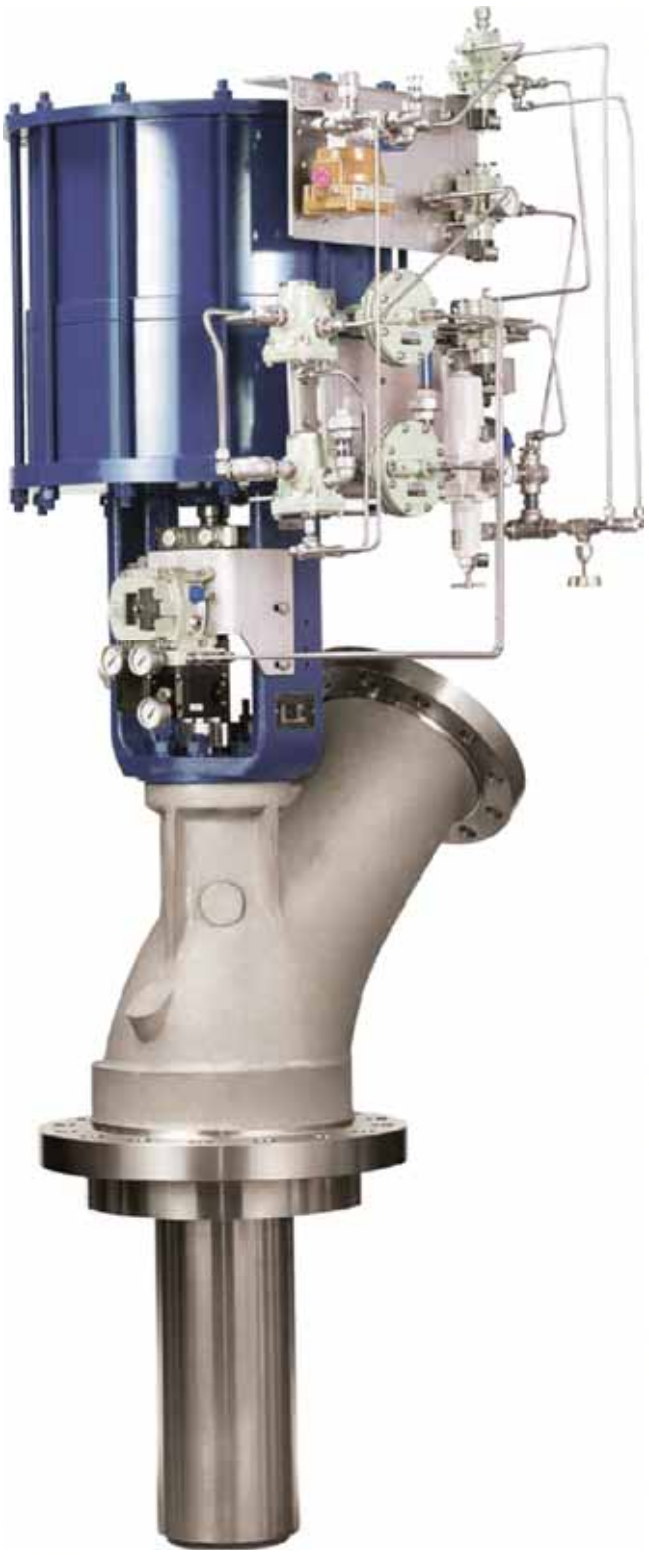

Typical Applications:

* Tank level control
* Pressure letdown applications common in reactor or crystallizer tanks.

Sever Service Control Valve

VL Series

The rugged cage guiding, optional pressure balancing and a host of custom engineered trim designs makes these valves suitable for higher pressure drops and other sever service applications, where conventionally designed control valves fail to perform satisfactorily.

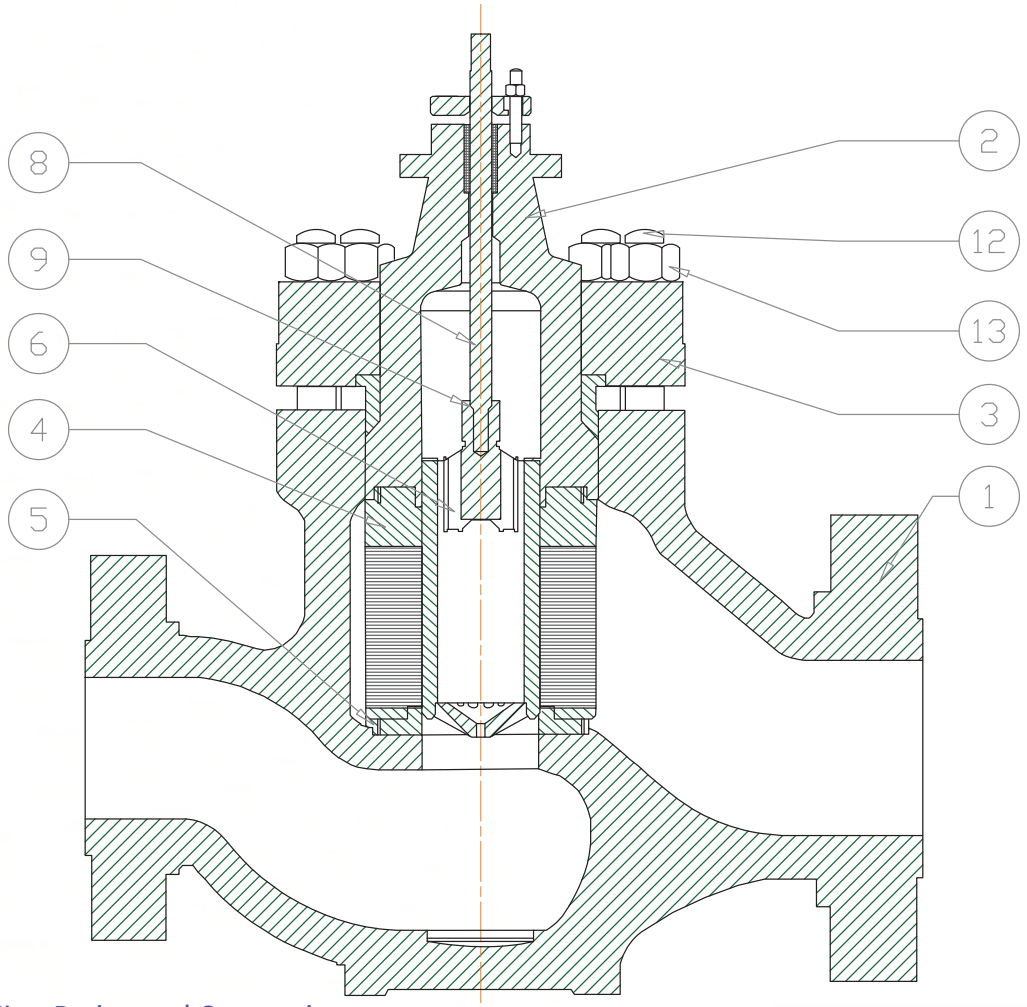

ITEM	PART NAME
1	Body
2	Bonnet
3	Bonnet Flange
4	Cage (V-LOG Stack)
5	Seat Ring
6	Plug
7	Guide Bushing
8	Plug Stem
9	Plug Pin
• 10	Gasket
11	Metal Seal (Bridgeman)
12	Body Bonnet Stud
13	Nut

Size, Rating and Connection:

Flanged (RF,RTJ,T&G,FF) & Welded: 3”-30” , ANSI 150-2500

Body Materials:

Carbon Steel
Stainless Steel
Super-alloy

Actuators:

Model DS Spring Diaphragm
Model DM Multi Spring Diaphragm
Model PS & PD Cylinder

Trim:

Single Stage Lo-dB
Double Stage Lo-dB
Partial Stage
V-LOG

Characteristic:

Custom Characteristic
Linear



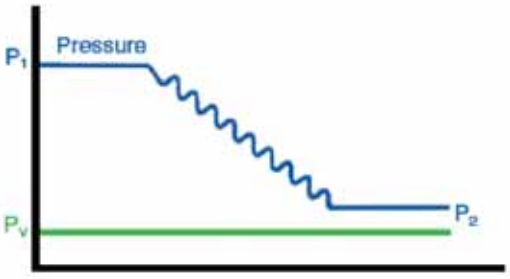

Energy Profile:
Energy Management Profile Trim



Higher Allowable Pressure Drops

VL series control valves provide exceptional and dependable performance over a wide range of pressure drops typical of severe services. Just as important, it handles a vast majority of all shut-off pressures with standard pneumatic spring-diaphragm actuators.

Greater Capacity With Low Recovery

Rated capacity for each VL series valve is at top levels established for contemporary cage guided valves.

These unusually high capacities are attained with minimum pressure recovery, as indicated by the high critical flow factors, which minimizes possibility of cavitation in liquid service.

Tight Shut-off

VL series valves can provide single-seat leak tightness of Class IV in accordance with ANSI/FCI 70.2, or the exceptional leak tightness of Class V.

Wide Temperature Range

Standard VL series valves handle temperatures from -30°C to 566°C. Standard bonnet is designed with a moderately finned extension, so no bonnet change is necessary in this temperature range. Optional bonnet design makes VL series control valves suitable for operations up to -196oC.

High Performance Material Is Standard

Without exception, the material specified as standard for VL series valves have been tested and selected to provide trouble free operation in services with high pressures and extreme temperatures. The superior trim material employed ensures durability of the valve for any severe application.









Specific Applications:

- Compressor Antisurge
- Flare to atmosphere

Sever Service Control Valve

High-Pressure Labyrinth Trim : HPL Series

These valves provide high pressure, compressible fluid control without the erosion, vibration and high noise associated with conventional control valves. Specially designed for Multiphase flow

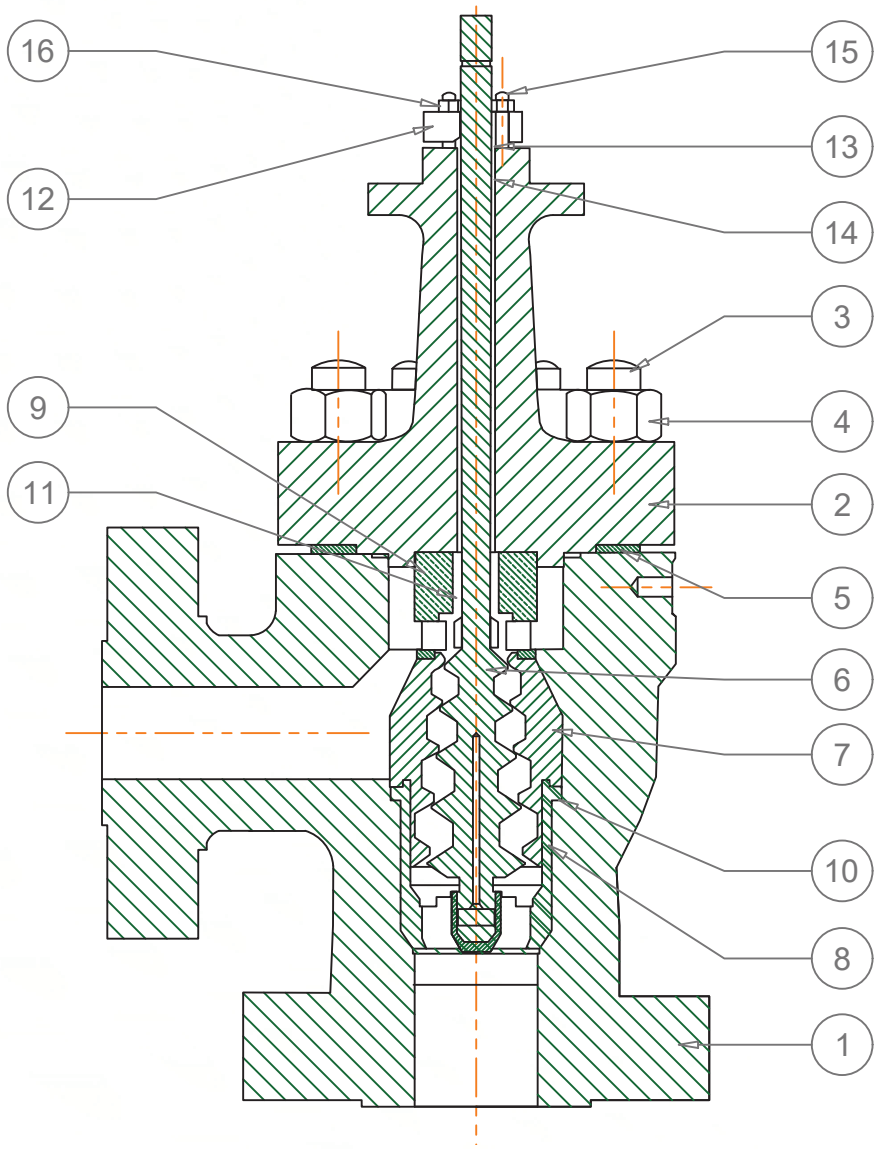

Item	Part Name
1	Body
2	Bonnet
3	Body Stud
4	Body Nut
5	Body Gasket
6	Plug/Stem
7	Liner/Seat
8	Spider
9	Retainer
10	Trim Gasket
11	Stem Bushing
12	Packing Flange
13	Packing Follower
14	Packing Set
15	Packing Studs
16	Packing Nuts
*17	Actuator Bolts

*: Not Shown

Size, Rating and Connection:

Flanged (RF,RTJ) & Welded: 1”-8” , ANSI 600-2500, API 2K-10K

Body Materials:

Carbon Steel

Stainless Steel

Chrome-moly steel

High alloy steel

Actuators:

Model DS Spring Diaphragm

Model DM Multi Spring Diaphragm

Model PS & PD Cylinder

Trim:

Plug Type : 1-9 stage

Characteristic:

Modified Linear

Temperature Range:

-29 °C to 565 °C



Specifications:

Cavitation Elimination

The valve's multi-stage trim design reduces the pressure drop in small increments without allowing the local pressure at each stage to drop below the fluid vapor pressure, thus preventing cavitation. The actively controlled stages of the axial flow trim throttle in unison to avoid the adverse effects of an exaggerated reduction at any single stage.

Reliable Tight Shutoff

The standard seat design leakage rating meets IEC534-4 and ANSI/FCI 70.2 Class V shutoff requirements. The valve can also be supplied with block valve tight shutoff to comply with MSS-SP-61 specifications.

Debris Tolerance

Wide flow paths in the trim allow for passage of large particles entrained within the flow stream that would otherwise cause damage or loss of capacity. This ensures continuous and efficient operation by eliminating concerns of potential clogging due to debris in the flow stream. GSSE HPL series valve is a suitable design for many high-pressure, dirty service applications, including wellhead choke valves.

Expanding Area Trim Design

The circumference of each pressure reduction stage within the HPL series trim is designed to gradually increase as flow moves towards the downstream section. This expansion compensates for the change in gas density with the pressure and ensures a nearly constant fluid velocity throughout the complete throttling process, providing the valve with two advantages:

1. Reduction in noise produced by the fluid velocity
2. Considerable decrease in erosion of the plug and seat liner caused by particulate in the flow stream or fluid flashing.

For many applications that experience flashing service conditions, such as super critical power plant start-up valves or hot high-pressure separator letdown in refineries, the HPL series valve provides a low-velocity outlet area to minimize any effect of the phase transformation process. Similarly, for applications with entrained solids, such as gas wellhead choke applications, the valve reduces the velocity of the moving particulate to minimize wear and erosive damage to the trim and outlet flow area.

Many designs include a larger outlet compared to the inlet size to retain the low velocity as the fluid exits the valve into the downstream piping. This arrangement eliminates the need for additional piping modifications, such as downstream reducers.



Specific Applications:

* High pressure compressible fluid or two-phase applications
* Erosion, vibration and high noise conditions
* high pressure, high temperature
* flashing hydrocarbon liquid services
* Hot High Pressure Separator control in Hydro processing applications
* Gas wellhead control in off-shore choke valves
* High pressure gas letdown with entrained debris

Sever Service Control Valve

Anti Surge Large Mass Flow : LMF

Specifically designed for applications with large mass flow rates and high differential pressures. Typical installations may be found in compressor surge control, gas to flare, atmospheric vent, or other applications where the ratio of inlet/outlet pressures require substantial levels of noise attenuation and large valve sizes. A variety of options and configurations are available to create effective solutions for our customers specific applications.

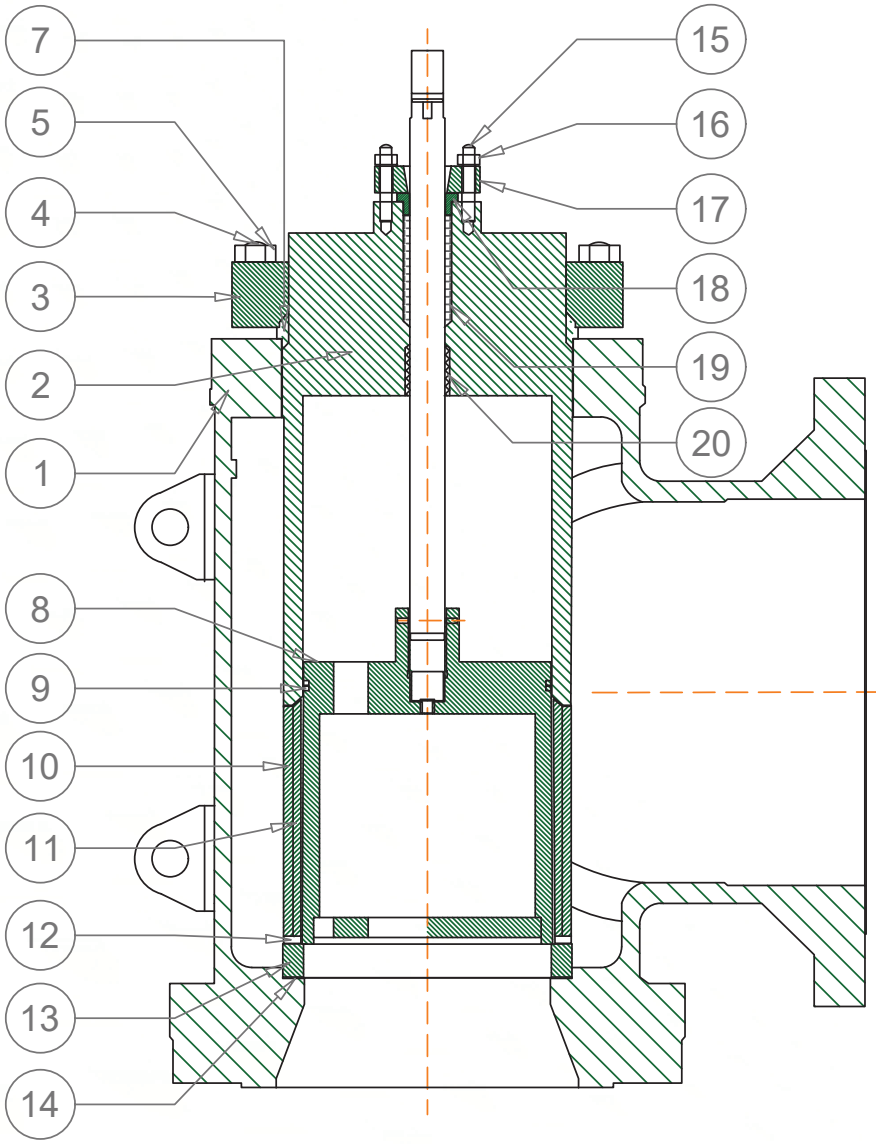

Item	Part Name
1	Body
2	Bonnet
3	Bonnet Flange
4	Body Stud
5	Body Nut
6	Metal Seal
7	Stem
8	Plug
9	Seal Ring
10	Cage (V-Log or Lo-dB)
11	Cage Retainer
12	Soft Seat Insert
13	Seat Ring
14	Conical Spring
15	Packing Flange Stud
16	16 Packing Flange Nut
17	Packing Flange
18	Packing Follower
19 *	Packing S/A
20	Guide Bushing

Size, Rating and Connection:

Inlet 4” – 30” , ASME CLASS 150-2500

Outlet 6” – 36”, ASME CLASS 150-600

ASME Flanged (RF, RTJ, API), Butt Weld

Body & Bonnet Material:

Carbon Steel, Low Temperature Carbon Steel, 316 Stainless Steel

Chrome Moly Steels

Trim

Plug : Balanced, Unbalanced, Auxiliary Pilot

Stack or Cage: Ported Cage, Single Stage Lo-dB, Double Stage Lo-dB

V-LOG Stack, Partial Stack

Seat Ring: Quick Change

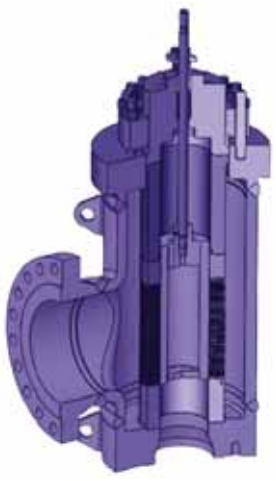

Specifications:

Low Noise Trim

Our Best Fit approach allows for the widest range of noise attenuation options, providing the desired noise level at the lowest cost of ownership. These attenuation products range from single and double stage Lo-Db trim or up to as many as 40 stages of 3-dimensional V-LOG tortuous path trim. The selected trim option is always custom engineered to provide best results for each unique application.

Single and double stage Lo-dB trim is selected in most low to moderate pressure drop ratio applications. This technology is customized by modifying the size and spacing of each hole drilled into the cage to provide a minimal sound pressure level at the trim exit.

The 3-dimensional tortuous path design of GSSE's V-LOG trim controls pressure reduction through the management of the process fluid energy. This is accomplished by directing the gas through discrete flow channels that are designed with multiple stages consisting of 90-degree turns along with the intermediate contractions and expansions in the flow area. The enhanced flow geometry of the V-LOG trim creates a series of kinetic energy losses, followed by partial energy recoveries at each stage.

Large Pressure Drop – Energy Management

Process applications that require the LMF Series design often experience extremely high pressure drop ratios (P1/P2). These high ratios release large amounts of energy as the process fluid's pressure is reduced. This energy release can lead to excessive noise and vibration if not properly addressed in the valve design.

High Capacity

are met through a wide range of valve plug diameters, stroke lengths, and body gallery diameters to suit any application within standard product lead times.

Balanced Plug

Balanced plug designs deliver stability with smaller actuator thrust requirements, as compared to unbalanced designs. Normally, the LMF Series valves are installed in a flow-to-open configuration allowing radial expansion from the smaller diameter cage to the expanded area of the valve body. The free expansion of the fluid and precise separation of the trim exit flow jets, maximize trim noise attenuation and minimizes vibration within the valve body. For installations that require flow-to-close configurations, an auxiliary pilot plug may be supplied to reduce actuator thrust requirements.



Typical Applications:

* Boiler feed water start-up and control
* Steam letdown
* Pump discharge
* Water reinjection
* Gas recycle and Vent Application
* Reactor Building
* Turbine Building,
* Reactor Facility Grounds & BOP
* Charge Gas Compression
* Pipeline Integrity, Operations
* Refrigeration, Liquefaction
* Loading/Shipping, Regasification
* Compression.

Sever Service Control Valve

Heavy Oil Erosion Resistant : HOV

Designed for special applications such as hydrocarbon service involving severe operating conditions where high temperatures and/or high pressures, high pressure drops, severe coking conditions, erosive fluid particles, and flashing liquids are encountered. They are particularly adapted to pressure or level control systems and emergency blowdown or dropout service.

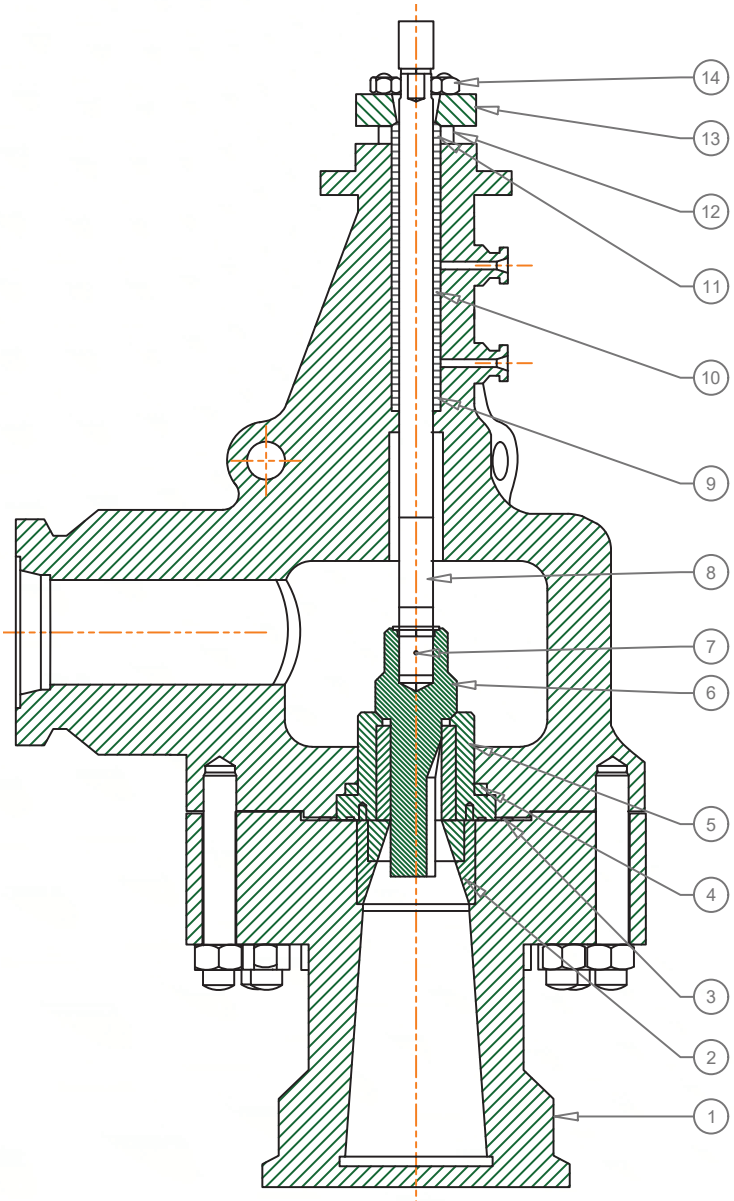

Item	Part Name
1	Valve Body
2	Venturi Insert
3	Seat Ring Gasket
4	Body Gasket
5	Seat Ring Housing
6	Nozzle Plug
7	Plug Pin
8	Plug Stem
9	Packing
10	Lower Guid Bushing
11	Guid Bushing
12	Packing Follower
13	Packing Flange
14	Packing Nut

Size, Rating and Connection:

Flanged (RF,RTJ) & Hubs: 1”-12” , ANSI 600-2500

Body Materials:

347 Stainless Steel

Trim Materials:

Inconel 718, Ceramic & Tungsten Carbide

Actuators:

Model PS & PD Cylinder

Trim:

Plug Type : Bull Nose Top Guided & Fluted Top and Bottom Guided

Characteristic:

Modified Linear



Specifications:

High Performance

Materials

Materials of construction have been selected for high performance and long life.

Heavy Oil Valve

The GSSE HOV series control valve is designed to properly handle the difficult service associated with resid hydro processing of heavy oils. Such applications commonly include high temperatures, high pressures, erosive particulate and multi-phase flow. The HPL series is designed as the superior solution for these application difficulties.

Rugged Design

The HOV Series control valve is designed with rugged top guiding to resist vibration associated with high pressure letdown or multi-phase service. Designs featuring GSSE's axial flow fluted plug provide additional lower guiding for added stability and vibration resistance. High thrust and high stiffness actuation further extends service life in difficult applications.

Hardened Trim

The HOV Series is designed for severely erosive applications and thus requires specialty materials to provide high hardness on critical surfaces. Trim components include application-specific materials including tungsten carbide on moving components and ceramics on stationary components.

The inner body contours are streamlined to give maximum throat efficiency and freedom from erosion and to eliminate pockets causing flow reversal and eddy currents.

Provision is made for the introduction of a flushing medium which may be necessary when passing fluids containing solid particles, or to prevent coke formation in refinery service at extremely high temperatures.

The direct actuator is used air-to-push-down action and the reverse actuator for air-to-push-up action. Direct or reverse actuator can be used, depending on action desired.

Specific Applications:

* High Velocity Erosive Flow
* Residual Hydrocracking
* Heavy Oil Letdown
* 2-phase erosive service
* Resid hydro-cracking
* Service with entrained catalyst
* Service with Pressure drops up to 4000 psi
* Extremely Erosive Hydrocarbons






GS
Desig
and B
For Li
and N

SE

n and Manufaturing of Pressure Regulator

lack Pressure Regulators:

iquid, Steam, Process Gas

latural Gas Application and Tank Blanketing



Anti Cavitation and Anti-Noise Trim

Soft Seal and Metal Seal

Direct Operated and Pilot Operated

Relief Valve and Backpressure Regulator

The relief valve assembly is located in the center of the regulator diaphragm. Internal relief is often used in industrial applications where atmospheric exhaust is acceptable and low buildup is not required.

Backpressure Regulator Selection

Backpressure regulators control the inlet pressure rather than the outlet pressure. The selection criteria for the backpressure regulator is the same as for a pressure reducing regulator.

Pressure Regulators:

Regulators are self-contained, control devices which use energy from the controlled system to operate whereas control valves require external power sources, transmitting instruments and control instruments.

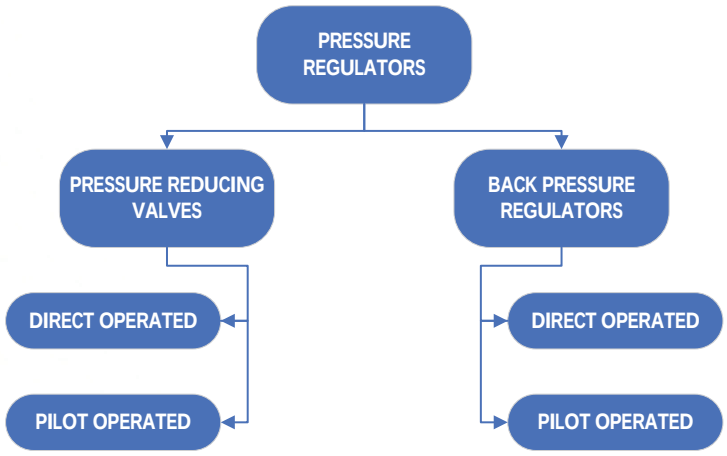

Outlet Pressure Range psig / barg	Air	Steam	Tank Blanketing	Liquid	Process Gas	Fuel Gas	Model	Operation Method	Body Size, NPS	MAXIMUM INLET PRESSURE, psig / barg
2 to 400 / 0.14 to 27.6	•	•		•	•	•	MN5R	Direct	¼ to 2	1000 / 68.9
1in. w.c. to 7 / 2 mbar to 0.48	•		•		•	•	TZ05	Direct	¾ and 1	200 / 13.8
3 to 500 psig / 0.21 to 34.5 bar	•				•	•	Z30	Direct	1 and 2	1500 / 103
5 to 300 / 0.34 to 20.7	•			•	•	•	ME05R	Direct	1, 2, 3 and 4	400 / 27.6
0.25 in. wc to 7 / 0.6 mbar to 0.48	•		•		•		EF90	Pilot	1 to 12	400 / 27.6
4 in. w.c. to 300 / 10 mbar to 20.7	•		•	•	•	•	ZN98-TGC	Pilot	1 to 12	400 / 27.6
14.5 to 1160 / 1 to 80	•				•	•	E2H	Pilot	1,2,3,4,6,8 and 12x6	1,500 / 103
0.5 in wc to 7 psig/1mbar to 0.48	•				•	•	T5L	Pilot	1, 2, 3, 4, 6, 8 and 10	1480 / 102
2 to 250 / 0.14 to 17.2		•					N2B	Pilot	1, 1-1/2, 2, 3 and 4	42,400 lbs/h /19,234 kg/h
2 to 250 / 0.14 to 17.2		•					N2S	Pilot	1 to 6 x 4	300 / 20.7
10 to 700 / 0.69 to 48.3	•				•	•	DE0A	Pilot	1" to 4X6	1500 / 103
0 to 150 / 0 to 10.3	•				•	•	S7D	Direct	1/2	20,900 / 560
2 in. w.c. to 100 / 5 mbar to 6.9	•		•		•	•	N9	Pilot	2	1000 / 69.0

Control Pressure Range psig / barg	Air	Steam	Tank Blanketing	Liquid	Process Gas	Fuel Gas	Model	Operation Method	Body Size, NPS	MAXIMUM INLET PRESSURE, psig / barg
2 to 375 / 0.14 to 25.9	•	•		•	•	•	MN8R	Direct	¼ to 2	400 / 27.6
2in. w.c. to 7 / 5 mbar to 0.48	•		•		•		TZ08	Direct	¾ and 1	75 / 5.2
3 to 250 / 0.21 to 17.2	•				•	•	Z30R	Direct	1 and 2	550 / 37.9
5 to 300 / 0.34 to 20.7	•			•	•	•	ME08R	Direct	1, 2, 3 and 4	400 / 27.6
0.5 in. w.c. to 7 / 1 mbar to 0.48	•		•		•		ZF90	Pilot	1 to 12	12.5 / 0.86
0.5 in. w.c. to 7 / 1 mbar to 0.48	•				•	•	ZN98-TGC-Z3EG	Pilot	1 to 6 and 8 x 6	8,795,000 /235,706
14.5 to 1160 / 1.0 to 80.0	•				•	•	E2HR	Pilot	1 to 4	13,833,000 /370,724

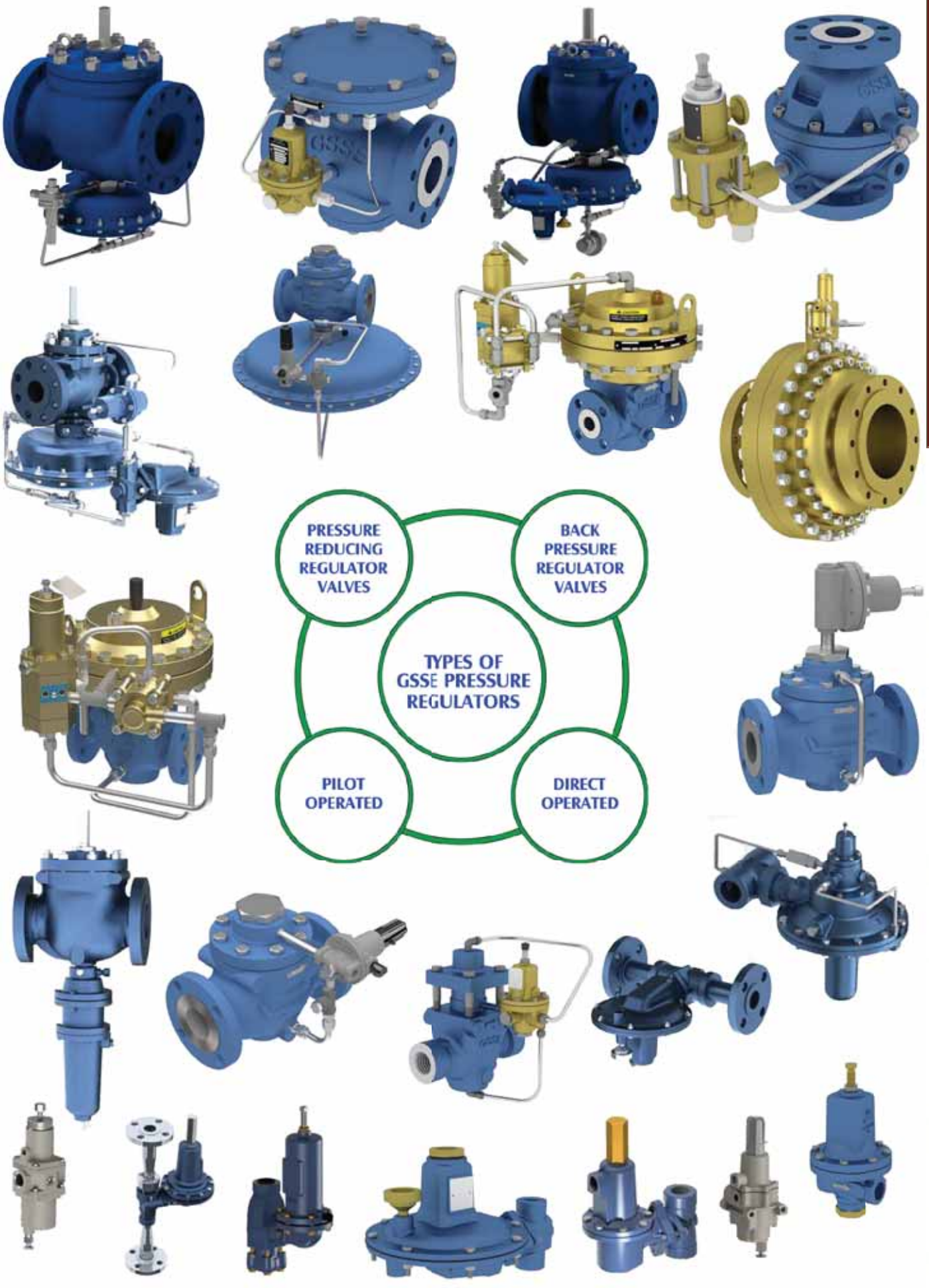
PRESSURE REDUCING REGULATOR VALVES
BACK PRESSURE REGULATOR VALVES
TYPES OF GSSE PRESSURE REGULATORS
PILOT OPERATED
DIRECT OPERATED

Pressure Regulator (Pilot-operated) N2B

The Type N2B Pressure Reducing Valve is the standard steam valve for industry. The Type N2B is designed to provide decades of continuous service. It can withstand dirty operating environments while providing accurate and stable pressure control. The Type N2B is applied as a main Pressure Reducing Valve in industrial process heating , Specially designed for hot water heat exchangers, absorption , chillers and boiler deaerator tanks.

Body Size	NPS 1, 1-1/2, 2, 3 and 4 / DN 25, 40, 50, 80 and 100
Outlet Pressure Range	2 to 250 psig / 0.14 to 17.2 bar
Maximum Inlet Pressure	300 psig / 20.7 bar
Maximum Temp Capacity	600°F / 316°C
Maximum Capacity	42,400 lbs/h / 19,234 kg/h
Operation Method	Pilot-Operated
Body Material	Cast Iron, Steel and Stainless Steel



Field of Application

OUTLET PRESSURE RANGE psig / bar	AIR	STEAM	TANK BLANKETING	LIQUID	PROCESS GAS	FUEL GAS	TYPE OR SERIES	OPERATION METHOD	BODY SIZE NPS	MAXIMUM INLET PRESSURE, psig / bar	MAXIMUM FLOW CAPACITY, SCFH / Nm³/h
2 to 250 / 0.14 to 17.2		*					N2B	Pilot	1, 1-1/2, 2, 3 and 4	300 / 20.7	42,400 lbs/h /19,234 kg/h

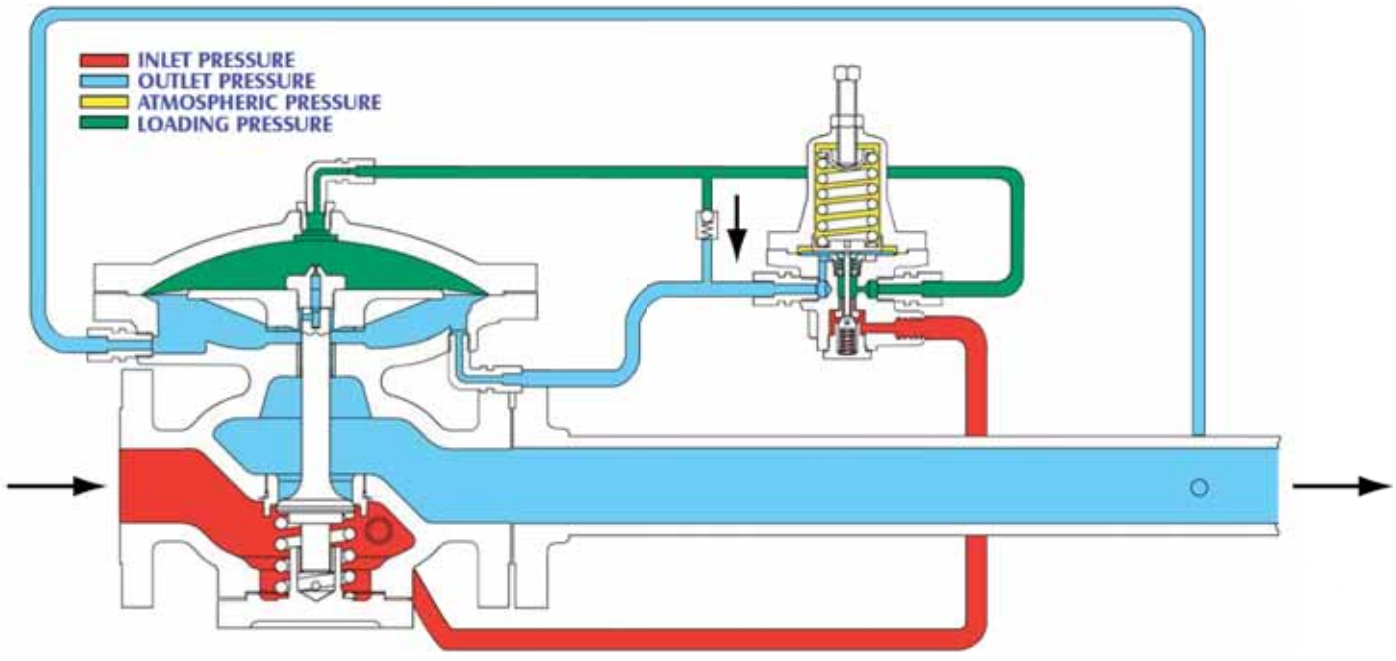

The Type N2S regulator is piston actuated for high cycle steam service with hardened trim for improved durability. This valve should be used with clear, dry or superheated steam. Noise reduction trim is available.

Body Size	NPS 1, 1-1/2, 2, 2-1/2, 3, 4 and 6 × 4 / DN 25, 40, 50, 65, 80, 100 and 150 x 100
Outlet Pressure Range	2 to 250 psig / 0.14 to 17.2 bar
Maximum Inlet Pressure	300 psig / 20.7 bar
Maximum Temp Capacity	650°F / 343°C*
Maximum Capacity	45,100 lbs/h / 20,457 kg/h
Operation Method	Pilot-Operated
Body Material	Cast Iron, Steel and Stainless Steel



Field of Application

OUTLET PRESSURE RANGE psig / bar	AIR	STEAM	TANK BLANKETING	LIQUID	PROCESS GAS	FUEL GAS	TYPE OR SERIES	OPERATION METHOD	BODY SIZE NPS	MAXIMUM INLET PRESSURE, psig / bar	MAXIMUM FLOW CAPACITY, SCFH / Nm³/h
2 to 250 / 0.14 to 17.2		*					N2S	Pilot	1 to 6 x 4	300 / 20.7	45,100 lbs/h / 20,457 kg/h

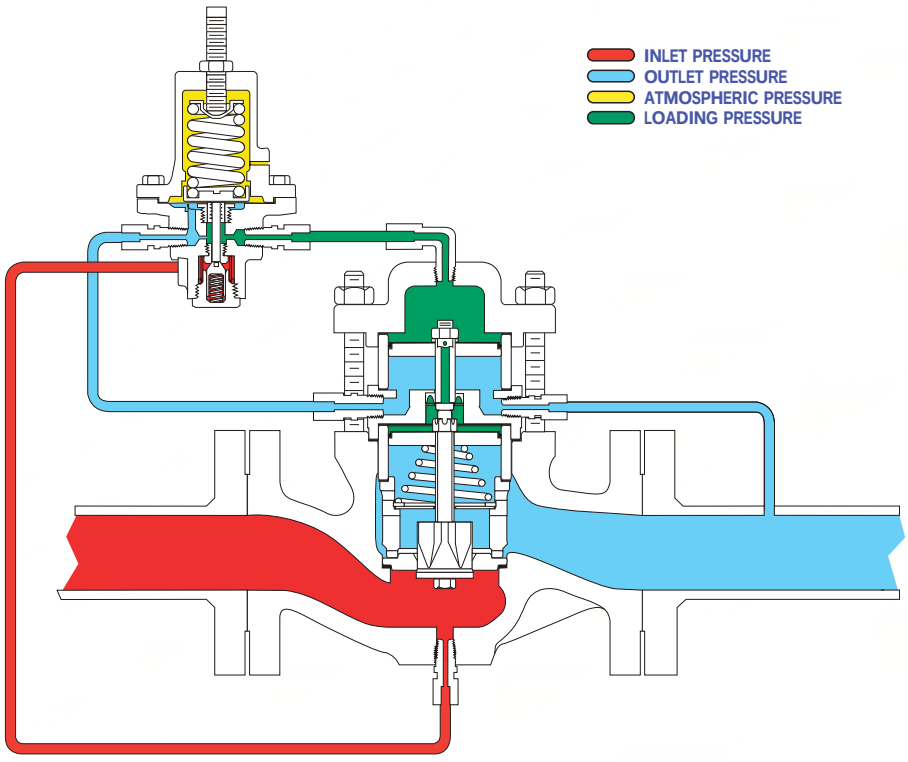

Pressure Reducing Regulator (Direct-operated) ME05R

The Type ME05R is fast-response, high-capacity, direct-operated multi-purpose regulator designed to handle different applications and flow media. It is available in linear and quick opening trim cages and is designed to meet API 614 as required by lube oil manufacturers. Also in Low pressure and high pressure for Liquid, Air and Gas Services

Body Size	NPS 1, 2, 3 and 4 / DN 25, 50, 80 and 100
Outlet Pressure Range	5 to 300 psig / 0.34 to 20.7 bar
Maximum Inlet Pressure	400 psig / 276 bar
Maximum Capacity	1650 gpm / 6240 l/min
Operation Method	Direct-Operated
Body Material	Cast Iron, Steel and Stainless Steel
Maximum Temp Capability	250°F / 121°C*



Field of Application

OUTLET PRESSURE RANGE psig / bar	AIR	STEAM	TANK BLANKETING	LIQUID	PROCESS GAS	FUEL GAS	TYPE OR SERIES	OPERATION METHOD	BODY SIZE NPS	MAXIMUM INLET PRESSURE, psig / bar	MAXIMUM FLOW CAPACITY, SCFH / Nm^3/h
5 to 300 / 0.34 to 20.7	*			*	*	*	ME05R	Direct	1, 2, 3 and 4	400 / 27.6	1650 gpm /6240 l/min

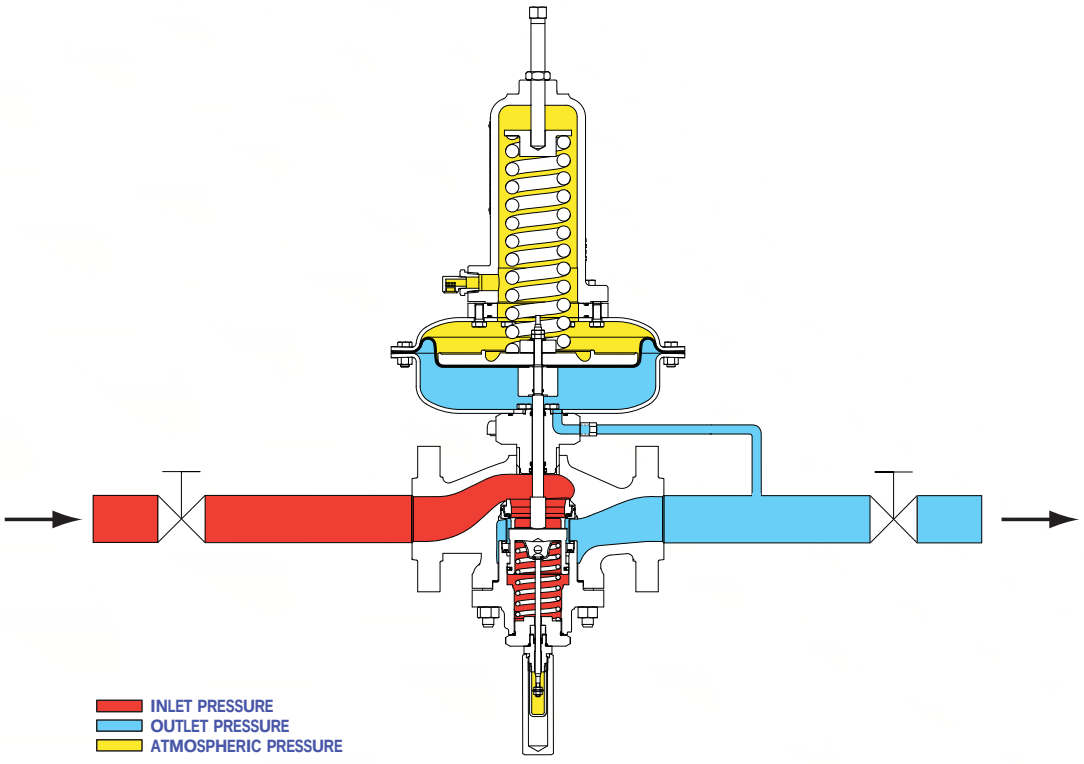

Back Pressure Regulator (Direct-operated) ME08R

The Type ME08R regulators are direct-operated, backpressure, high-capacity, multi- purpose regulators. It provides a simple, reliable and economical backpressure control in multi-purpose applications suitable for different flow media including liquid, air and gas. Applications include lube oil systems and any application where speed of response is critical, minimum differential pressure is a requirement or fluid is not free of impurities.

Body Size	NPS 1, 2, 3 and 4 / DN 25, 50, 80 and 100
Back pressure Control Range	5 to 300 psig / 0.34 to 20.7 bar
Maximum Inlet Pressure	400 psig / 27.6 bar
Maximum Capacity	1460 gpm / 5530 l/min
Operation Method	Direct-Operated
Body Material	Cast Iron, Steel and Stainless Steel
Maximum Temp Capability	250°F / 121°C*



Field of Application

OUTLET PRESSURE RANGE psig / bar	AIR	STEAM	TANK BLANKETING	LIQUID	PROCESS GAS	FUEL GAS	TYPE OR SERIES	OPERATION METHOD	BODY SIZE NPS	MAXIMUM INLET PRESSURE, psig / bar	MAXIMUM FLOW CAPACITY, SCFH / Nm^3/h
5 to 300 / 0.34 to 20.7	*			*	*	*	ME08R	Direct	1, 2, 3 and 4	400 / 27.6	1460 gpm /5530 l/min

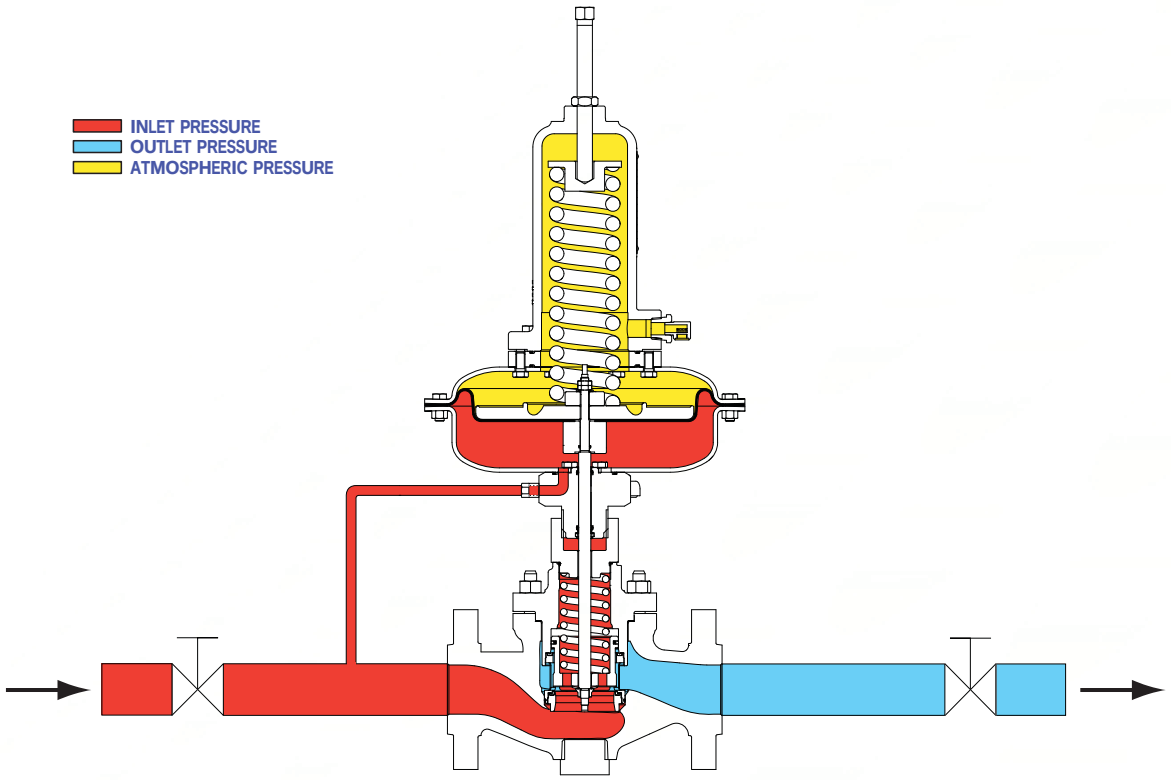

Pressure Reducing Regulator (Pilot-operated) E2H

The E2H and E2HSO Series regulators are accurate pilot-operated, pressure balanced and soft seated regulators. They are designed for use in large capacity distribution systems and power plant feeds. They provide smooth, reliable operation, tight shutoff and long life.

Body Size	NPS 1,2,3,4,6,8 and 12X6 DN 25,50,80,100,150,200,300 X 150
Outlet Pressure Range	29 to 609 psig / 2 to 42 bar
Maximum Inlet Pressure	1500 psig/ 103bar
Maximum Capacity	43,411,000 SCFH / 1,163,000 Nm3/h
Operation Method	Pilot-Operated
Body Material	Steel



Field of Application

OUTLET PRESSURE RANGE psig / bar	AIR	STEAM	TANK BLANKETING	LIQUID	PROCESS GAS	FUEL GAS	TYPE OR SERIES	OPERATION METHOD	BODY SIZE NPS	MAXIMUM INLET PRESSURE, psig / bar	MAXIMUM FLOW CAPACITY, SCFH / Nm³/h
14.5 to 1160 / 1.0 to 80.0	*				*	*	E2H	Pilot	1, 2, 3 and 4	400 / 27.6	1650 gpm /6240 l/min

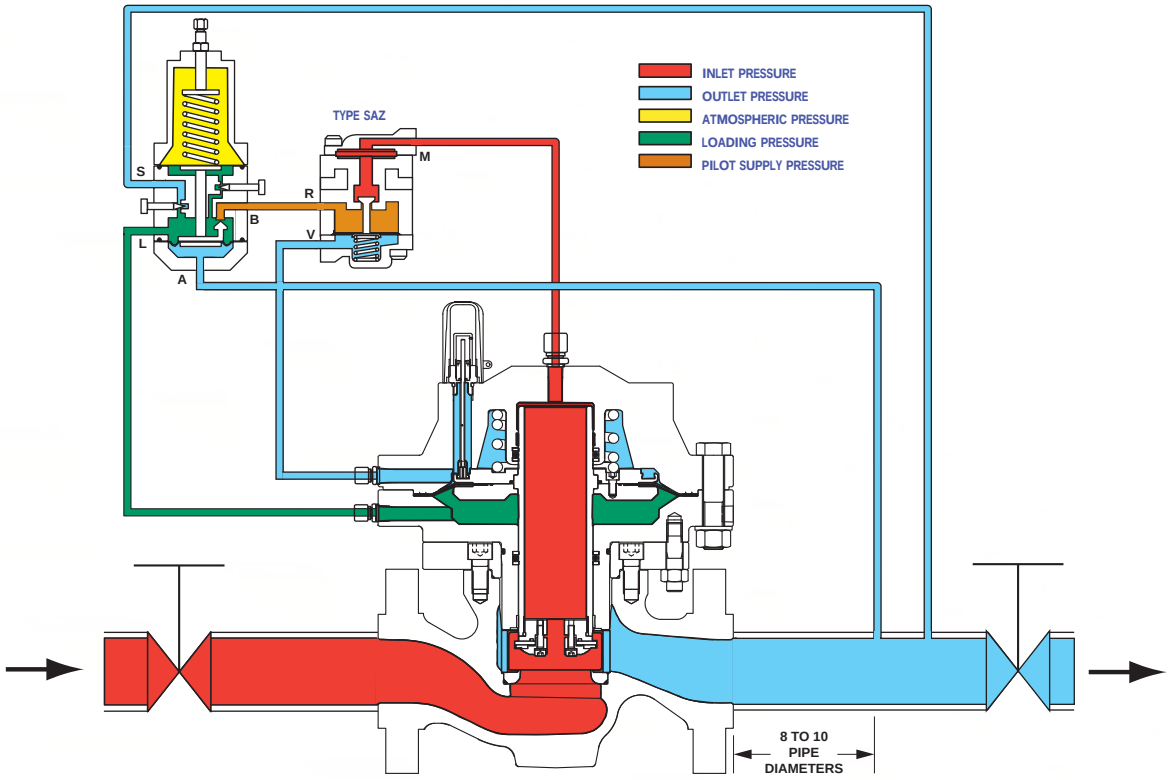

Back Pressure Regulator (Pilot-operated) E2H-R

The E2H–R Series Back regulators are accurate pilot-operated, pressure balanced and soft seated regulators. They are designed for use in large capacity distribution systems and power plant feeds. They provide smooth, reliable operation, tight shutoff and long life.

Body Size	NPS 1,2,3,4,6,8 and 12X6 DN 25,50,80,100,150,200,300 X 150
Outlet Pressure Range	29 to 609 psig / 2 to 42 bar
Maximum Inlet Pressure	1500 psig/ 103bar
Maximum Capacity	43,411,000 SCFH / 1,163,000 Nm3/h
Operation Method	Pilot-Operated
Body Material	Steel



Field of Application

OUTLET PRESSURE RANGE psig / bar	AIR	STEAM	TANK BLANKETING	LIQUID	PROCESS GAS	FUEL GAS	TYPE OR SERIES	OPERATION METHOD	BODY SIZE NPS	MAXIMUM INLET PRESSURE, psig / bar	MAXIMUM FLOW CAPACITY, SCFH / Nm^3/h
29 to 609 / 2 to 42	*				*	*	E2H-R	Pilot	1 to 4,6,8,12X6	1500 / 103	43,411,000 /1,163,000

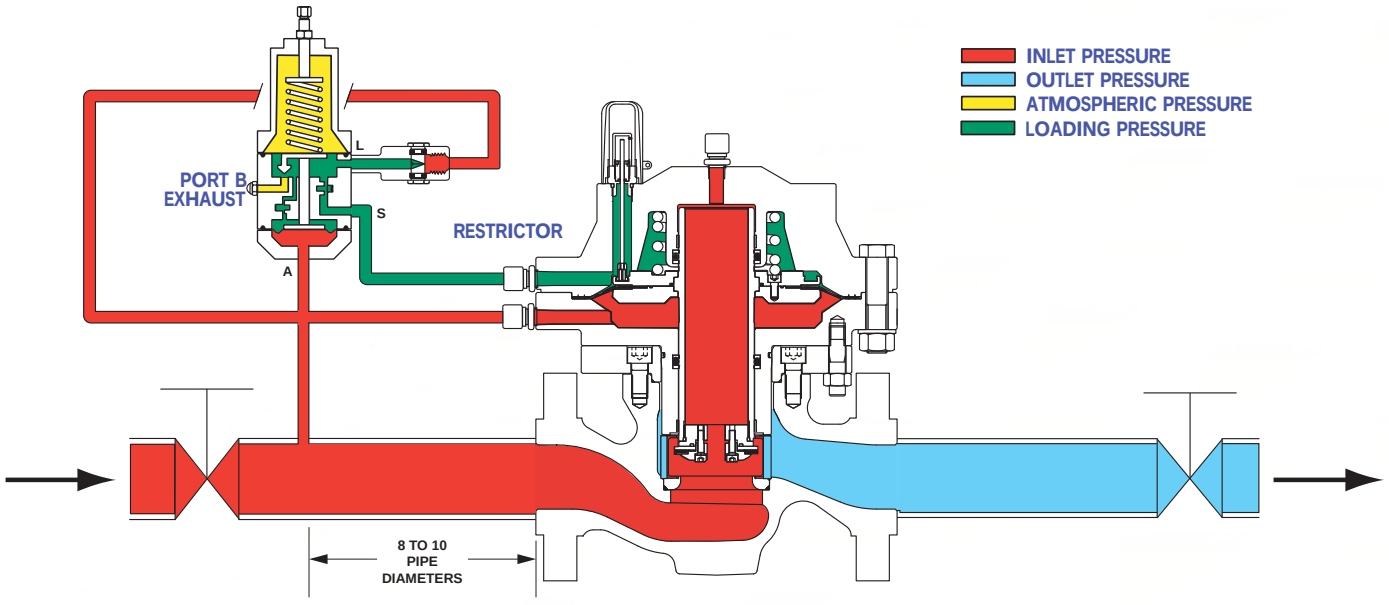

Pressure Reducing Regulator (Pilot-operated) ZN98-TGC

The Type ZN98 regulators are capable of providing accurate, fast response and high-capacities in low-pressure drop systems. Typical applications include: inert gas and plant air headers. Liquid Service , this type of regulator can be offered with anti noise and anti cavitation trim.

Body Size	NPS 1,2,3,4,6,8x6 and 12x6 / DN 25, 50, 80, 100,150, 200 x 150
Outlet Pressure Range	4in.w.c. to 300psig / 10 mbar to 20.7 bar
Maximum Inlet Pressure	400 psig / 27.6 bar
Maximum Capacity	11.331,000 SCFH / 303,671 Nm3/h
Operation Method	Pilot-Operated
Body Material	Cast Iron,Steel and Stainless Steel



Field of Application

OUTLET PRESSURE RANGE psig / bar	AIR	STEAM	TANK BLANKETING	LIQUID	PROCESS GAS	FUEL GAS	TYPE OR SERIES	OPERATION METHOD	BODY SIZE NPS	MAXIMUM INLET PRESSURE, psig / bar	MAXIMUM FLOW CAPACITY, SCFH / Nm³/h
4 in. w.c. to 300 / 10 mbar to 20.7	*		*	*	*	*	ZN98-TGC	Pilot	1 to 12 x 6	400 / 27.6	11,934 gpm /45,170 l/min

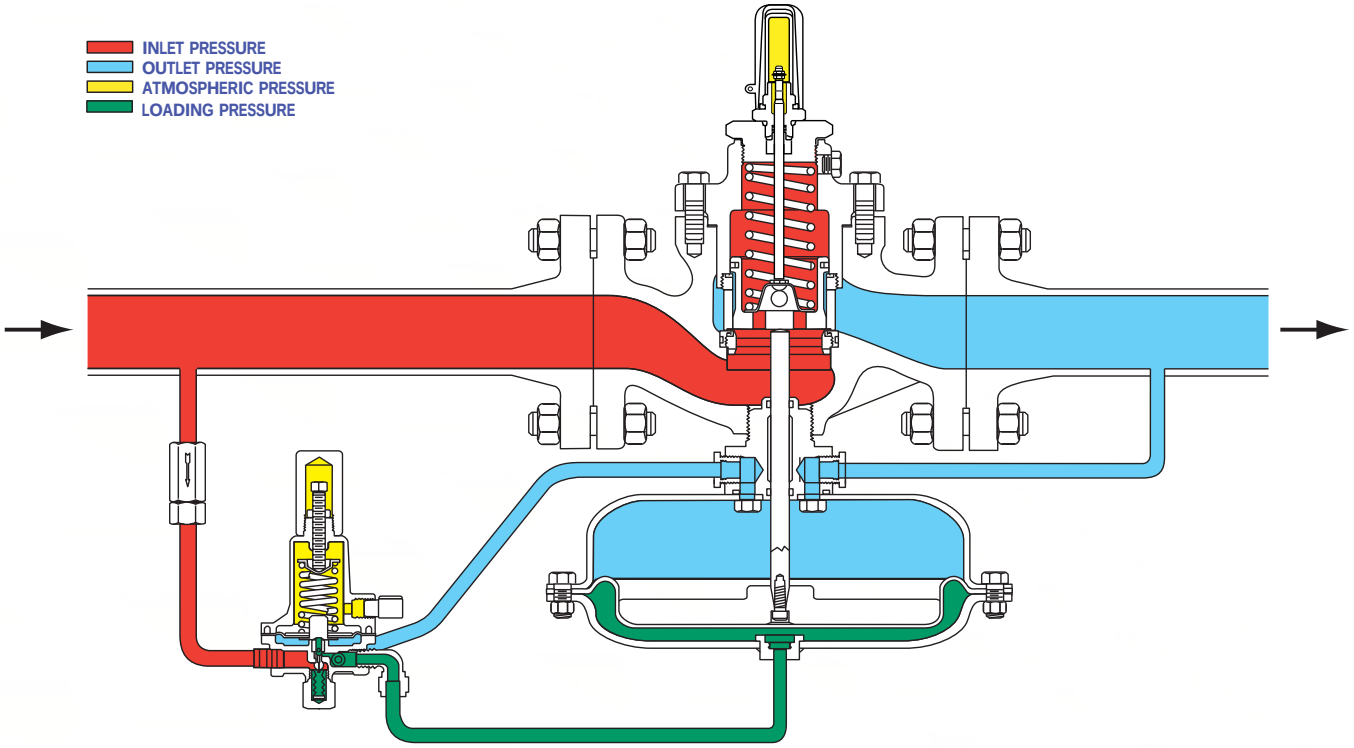

Types ZN98-TGC-Z3EG pilot-operated relief valves or backpressure regulators are suitable for both liquid and gas service and may also be used for throttling backpressure applications, such as on oilfield separators. These relief valves are combined with the Z358 Series pilots to result in the configurations shown in the Specifications section.

Body Size	NPS 1,2,3,4,6,8x6 and 12x6 / DN 25, 50, 80, 100,150, 200 x 150,300X150
Back pressure Control Range	10 to 400 psig / 0.69 to 27.6 bar
Maximum Inlet Pressure	400 psig / 27.6 bar
Maximum Capacity	8,795,000 SCFH / 235,706 Nm3/h
Operation Method	Pilot-Operated
Body Material	Cast Iron,Steel and Stainless Steel



Field of Application

BACK PRESSURE CONTROL RANGE psig / bar	AIR	STEAM	TANK BLANKETING	LIQUID	PROCESS GAS	FUEL GAS	TYPE OR SERIES	OPERATION METHOD	BODY SIZE NPS	MAXIMUM INLET PRESSURE, psig / bar	MAXIMUM FLOW CAPACITY, SCFH / Nm^3/h
10 to 400 / 0.69 to 27.6	*			*	*	*	ZN98-TGC-Z3EG	Pilot	1 to 6 and 12 x 6	400 / 27.6	8,795,000 /235,706

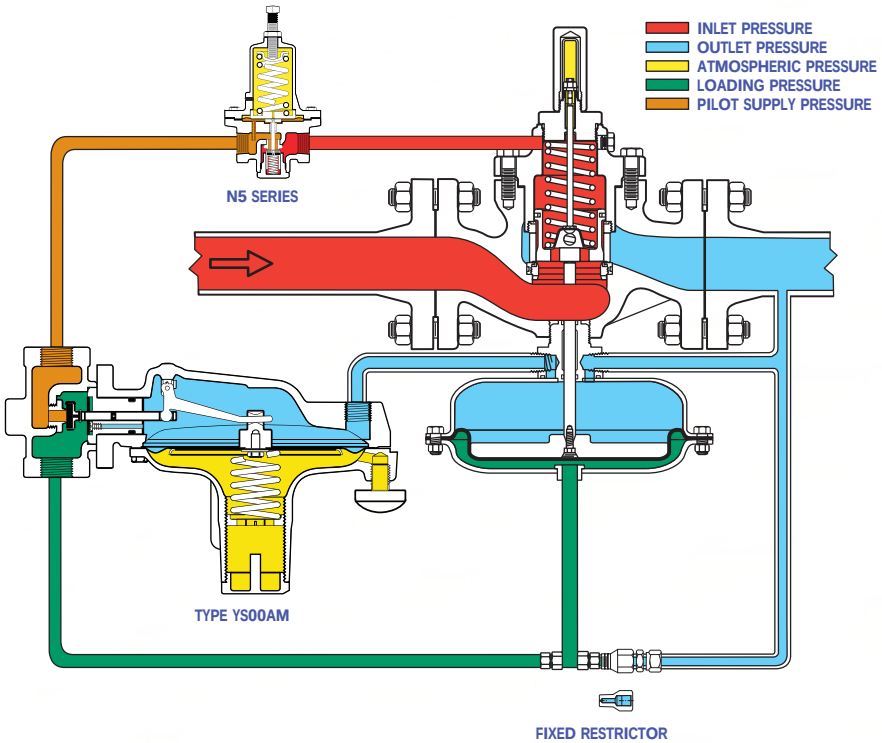

Pressure Reducing Regulator (Direct-operated) TZ05

The TZ05 Series is a compact regulator idea for accurate control of low-pressure systems. The unit is easy to install and maintain. For larger applications the Type YZ92 is available in NPS 1-1/2 and 2 / DN 40 and 50 sizes.

Body Size	NPS 3/4 and 1 / DN 20 and 25
Outlet Pressure Range	1in.w.c. to 7psig / 2 mbar to 0.48 bar
Maximum Inlet Pressure	200 psig / 13.8 bar
Maximum Capacity	12919 SCFH / 346.2 Nm3/h
Operation Method	Direct-Operated
Body Material	Cast Iron,Steel and Stainless Steel



Field of Application

OUTLET PRESSURE RANGE psig / bar	AIR	STEAM	TANK BLANKETING	LIQUID	PROCESS GAS	FUEL GAS	TYPE OR SERIES	OPERATION METHOD	BODY SIZE NPS	MAXIMUM INLET PRESSURE, psig / bar	MAXIMUM FLOW CAPACITY, SCFH / Nm³/h
1 in. w.c. to 7 / 2 mbar to 0.48	*		*		*	*	TZ05	Direct	3/4 and 1	200 / 13.8	12,919 / 346.2

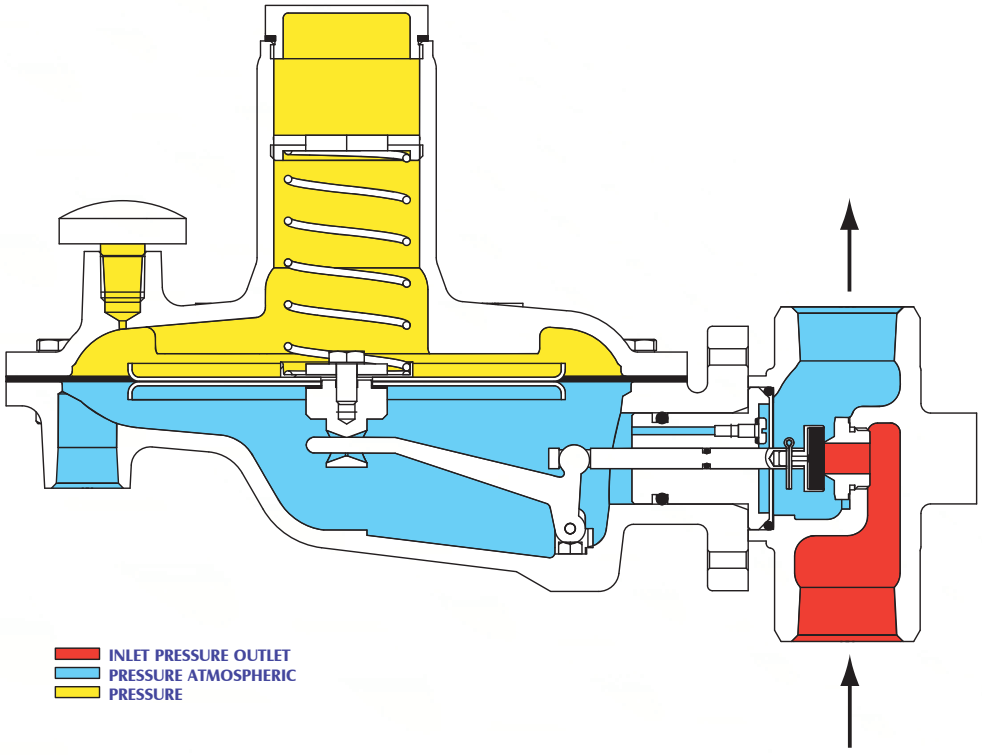

The TZ08 Series is ideal for relief or back pressure applications in small systems. The unit may also be utilized as a vapor recovery valve. A larger NPS 1-1/2 and 2 / DN 40 and 50 unit is available in the Type Y296.

Body Size	NPS 3/4 and 1 / DN 20 and 25
Back pressure Control Range	2 in. w.c. to 7 psig / 5 mbar to 0.48 bar
Maximum Inlet Pressure	75 psig / 5.2 bar
Maximum Capacity	2286 SCFH / 61.3 Nm3/h of Nitrogen
Operation Method	Direct-Operated
Body Material	Cast Iron,Steel and Stainless Steel



Field of Application

BACK PRESSURE CONTROL RANGE psig / bar	AIR	STEAM	TANK BLANKETING	LIQUID	PROCESS GAS	FUEL GAS	TYPE OR SERIES	OPERATION METHOD	BODY SIZE NPS	MAXIMUM INLET PRESSURE, psig / bar	MAXIMUM FLOW CAPACITY, SCFH / Nm^3/h
2 in. w.c. to 7 / 5 mbar to 0.48	*		*		*		TZ08	Direct	3/4 and 1	75 / 5.2	2286 / 61.3

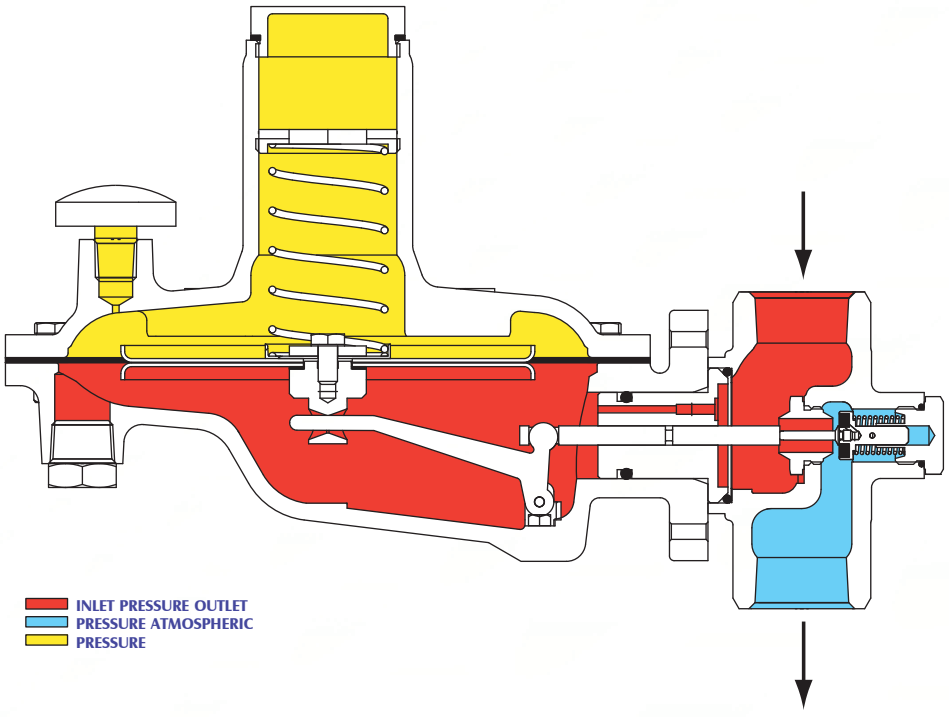

Pressure Reducing Regulator (Pilot-operated) EF90

The Type EF90 provides very accurate pressure control on low-pressure blanketing systems. The regulator helps to control emissions and provides protection against any contamination from atmospheric conditions.

Body Size	1, 2, 3, 4, 6, 8 x 6 and 12 x 6
Outlet Pressure Range	0.25 in. wc to 7 / 0.6 mbar to 0.48
Maximum Inlet Pressure	400 / 27.6
Maximum Capacity	2,811,000 / 75,335
Operation Method	Pilot-Operated
Body Material	Cast Iron,Steel and Stainless Steel



Field of Application

OUTLET PRESSURE RANGE psig / bar	AIR	STEAM	TANK BLANKETING	LIQUID	PROCESS GAS	FUEL GAS	TYPE OR SERIES	OPERATION METHOD	BODY SIZE NPS	MAXIMUM INLET PRESSURE, psig / bar	MAXIMUM FLOW CAPACITY, SCFH / Nm³/h
0.25 in. wc to 7 / 0.6 mbar to 0.48	*		*		*		EF90	Pilot	1, 2, 3, 4, 6, 8 x 6 and 12 x 6	400 / 27.6	2,811,000 / 75,335

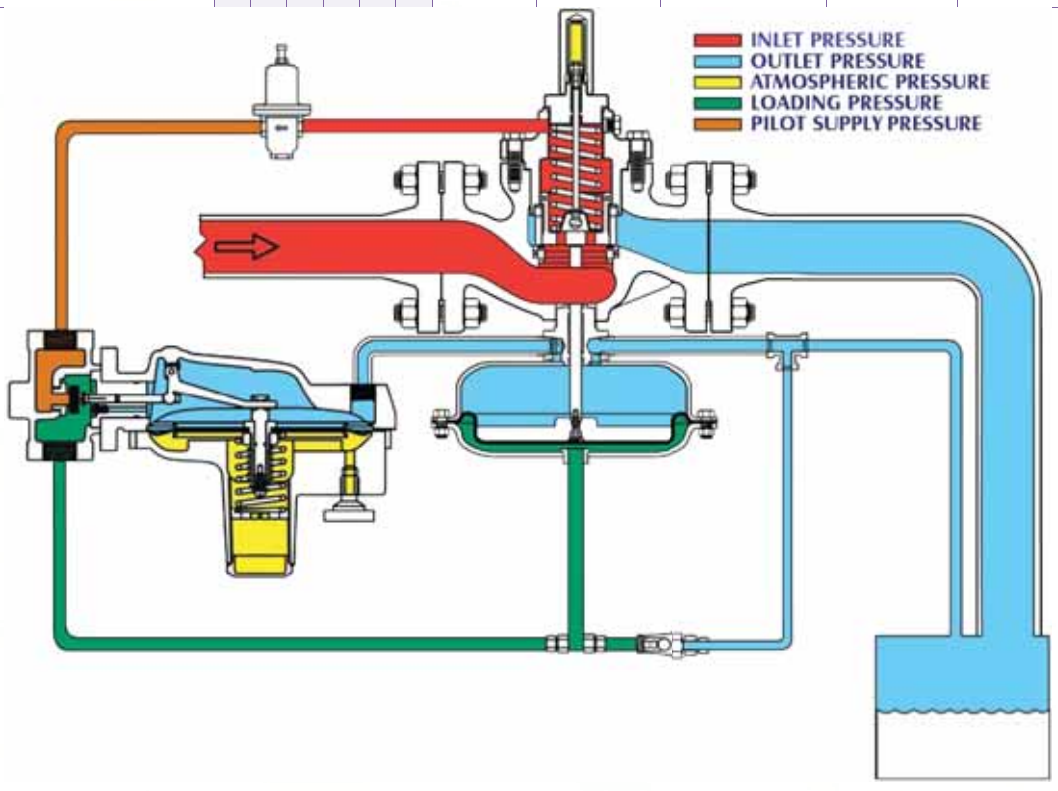

Back Pressure Regulator (Pilot-operated) ZF90

The Type ZF90 vapor recovery valve is a very accurate high-capacity which monitors the tank vapor pressure and opens when the tank pressure increases above the desired setpoint. The unit is ideal for use with vapor recovery systems because it is not affected by changes in pressure of the recovery system.

Body Size	1, 2, 3, 4, 6, 8 x 6 and 12 x 6
Back pressure Control Range	0.5 in. w.c. to 7 / 1 mbar to 0.48
Maximum Inlet Pressure	12.5 / 0.86
Maximum Capacity	327,400 / 8774
Operation Method	Pilot-Operated
Body Material	Cast Iron,Steel and Stainless Steel



Field of Application

BACK PRESSURE CONTROL RANGE psig / bar	AIR	STEAM	TANK BLANKETING	LIQUID	PROCESS GAS	FUEL GAS	TYPE OR SERIES	OPERATION METHOD	BODY SIZE NPS	MAXIMUM INLET PRESSURE, psig / bar	MAXIMUM FLOW CAPACITY, SCFH / Nm^3/h
0.5 in. w.c. to 7 / 1 mbar to 0.48	*		*		*		ZF90	Pilot	1, 2, 3, 4, 6, 8 x 6 and 12 x 6	12.5 / 0.86	327,400 / 8774

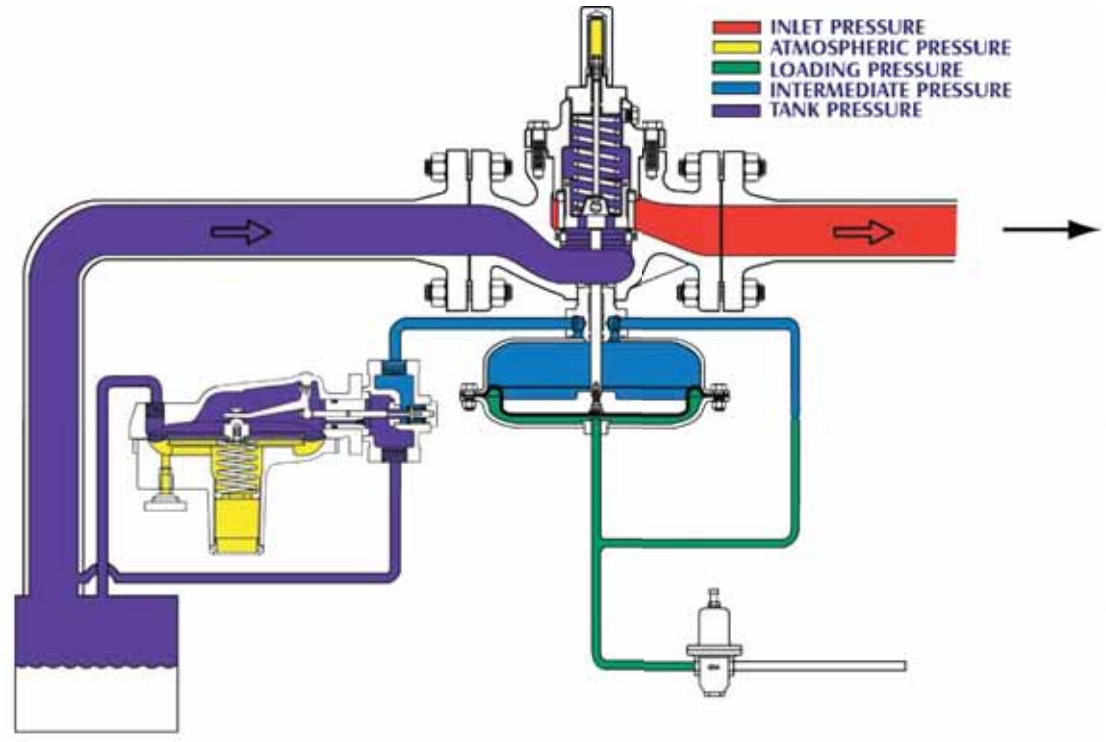

Pressure Reducing Regulator (Pilot-operated) T5L

T5L is an accurate Axial Flow , pilot-operated regulator Noise attenuation designed for high-pressure transmission/city gate, large capacity distribution systems and power plant and other industrial plant feeds. T5L provides smooth and quiet operation, Tight shutoff and long service life. The regulator is comprised of a main valve actuator, a Type PR10 pressure reducing pilot and a Type SA/Z pilot supply pressure regulator.

Body Size	NPS 1, 2, 3, 4, 6, 8 and 10 / DN 25, 50, 80,100, 150, 200 and 250
Control Pressure Range	14.5 to 1160 psig / 1 to 80 bar
Maximum Inlet Pressure	1480 psig / 102 bar
Flow up to	100,535,000 SCFH / 2,694,000 Nm3/h
Operation Method	Pilot-Operated
Body Material	Steel and Stainless Steel



Field of Application

OUTLET PRESSURE RANGE psig / bar	AIR	STEAM	TANK BLANKETING	LIQUID	PROCESS GAS	FUEL GAS	TYPE OR SERIES	OPERATION METHOD	BODY SIZE NPS	MAXIMUM INLET PRESSURE, psig / bar	MAXIMUM FLOW CAPACITY, SCFH / Nm³/h
14.5 to 1160 / 1 to 80	*				*	*	T5L	Pilot	NPS 1, 2, 3, 4, 6, 8 and 10	1480 / 102	100,535,000 / 2,694,000

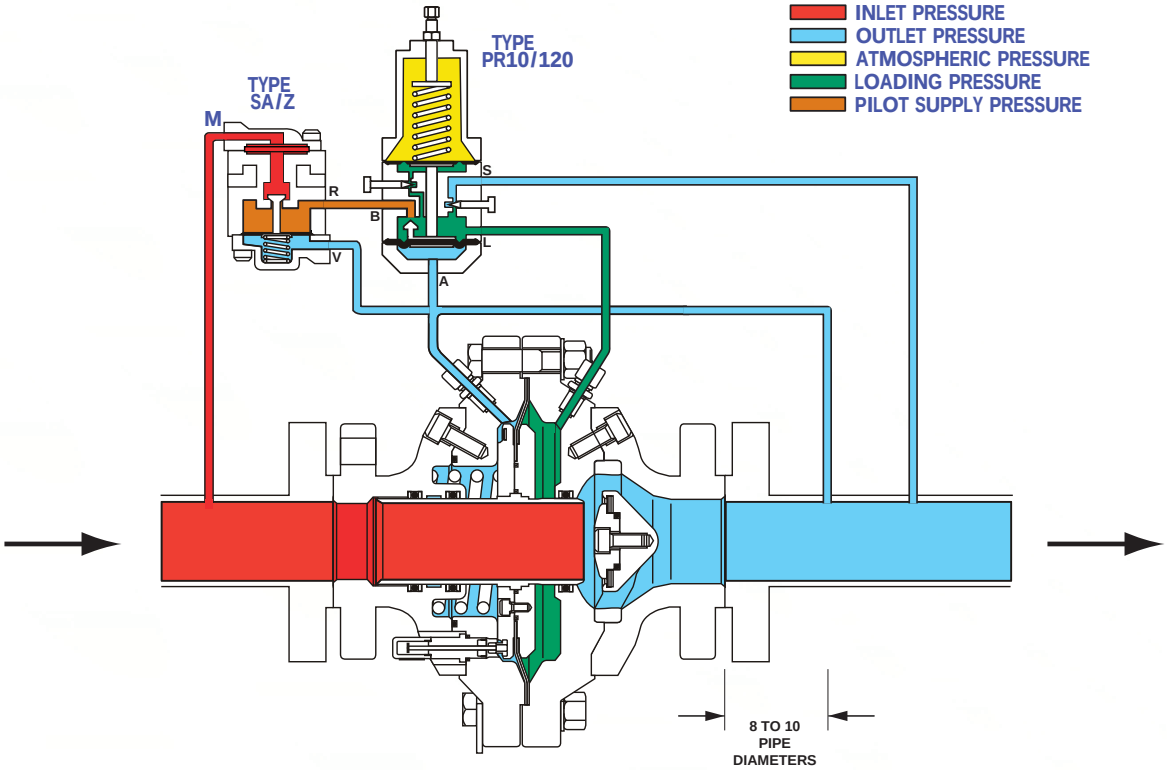

Back Pressure Regulator (Pilot-operated) T5L-R

Type T5L relief valve or back pressure regulator is accurate, pilot-operated and designed for high-pressure transmission city gate, large capacity distribution systems and power plant feeds. Type FL provides smooth, tight shutoff and long service life. The relief valve or backpressure regulator utilizes a main valve actuator, a Type PR10/182 pressure reducing pilot. The regulator's superior performance is due to the amplifying effect of the pilot and two-path control system. Changes in inlet pressure act quickly on the actuator



Field of Application

BACK PRESSURE CONTROL RANGE psig / bar	AIR	STEAM	TANK BLANKETING	LIQUID	PROCESS GAS	FUEL GAS	TYPE OR SERIES	OPERATION METHOD	BODY SIZE NPS	MAXIMUM INLET PRESSURE, psig / bar	MAXIMUM FLOW CAPACITY, SCFH / Nm³/h
29 to 1160 / 2 to 82	*				*	*	T5L-R	Pilot	1, 2, 3, 4, 6, 8 and 10	1480 / 102	74,442,000 / 1,995,000

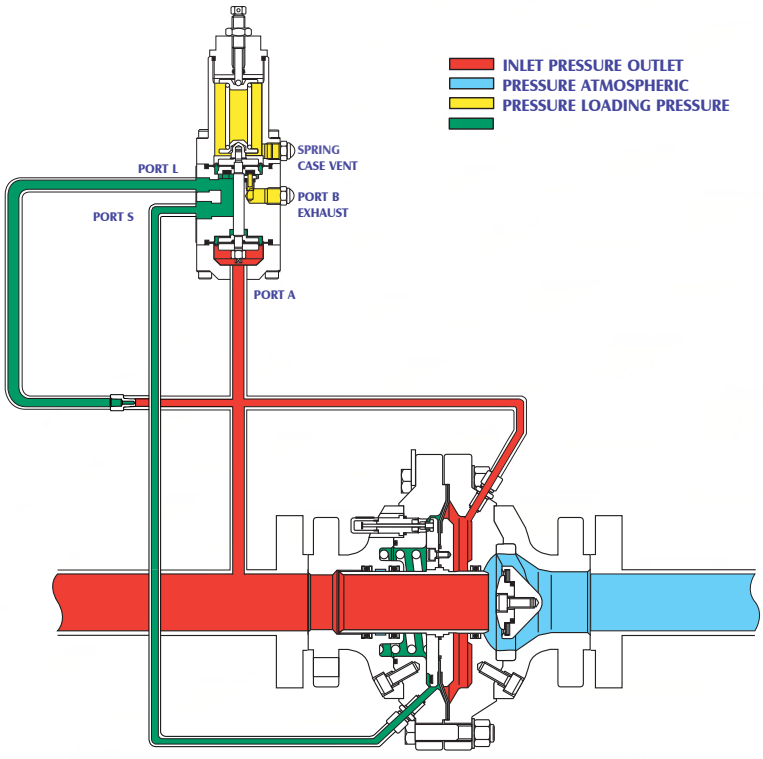

Pressure Reducing Regulator (Pilot-operated) N9

The Type N9 regulator is ideal for systems requiring accurate pressure control and fast response. Typical applications include fuel supply to industrial boiler, gas engines, furnaces, ovens, industrial burners and dryers.

Body Size	NPS 2 / DN 50
Control Pressure Range	2 in. w.c. to 100 psig / 5 m bar to 6.9 bar
Maximum Inlet Pressure	1000 psig / 69.0 bar
Flow up to	265,000 SCFH / 7102 Nm3/h
Operation Method	Pilot-Operated
Body Material	Steel and Stainless Steel



Field of Application

OUTLET PRESSURE RANGE psig / bar	AIR	STEAM	TANK BLANKETING	LIQUID	PROCESS GAS	FUEL GAS	TYPE OR SERIES	OPERATION METHOD	BODY SIZE NPS	MAXIMUM INLET PRESSURE, psig / bar	MAXIMUM FLOW CAPACITY, SCFH / Nm³/h
2 in. w.c. to 100 / 5 mbar to 6.9	*		*		*	*	N9	Pilot	2	1000 / 69.0	265,000 / 7102

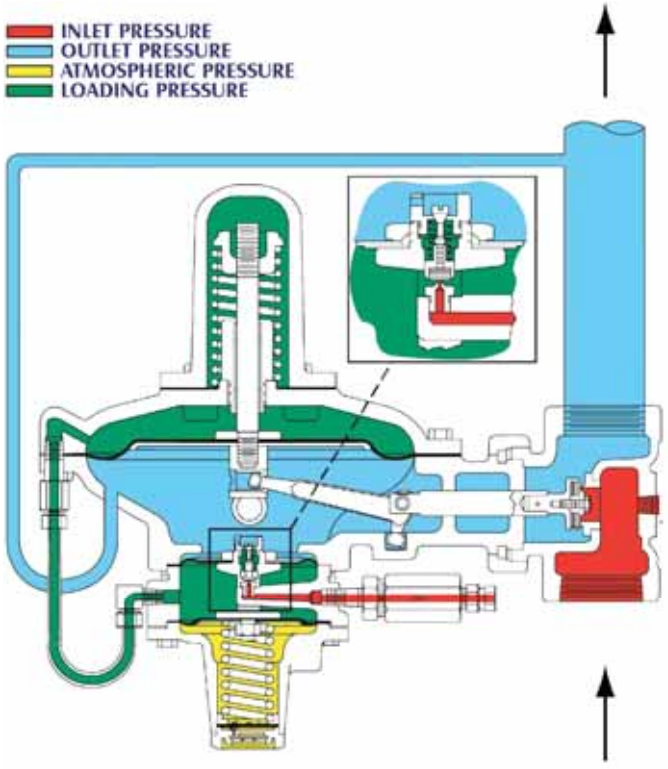

The Type DE0A pilot-operated high-pressure regulator is used where high capacity and accurate control are essential. This regulator includes one Type D2A pilot assembly mounted on the main valve for pressure reducing or wide-open monitoring applications or two Type D2A pilots mounted on the main valve for working monitor applications.

Body Size	NPS 1, 2,3,4 and 4x6 / DN 25, 50, 80, 100 and100 x 150
Outlet Pressure Range	10 to 700 psig / 0.69 to 48.3 bar
Maximum Inlet Pressure	1500 psig / 103 bar
Maximum capacity	21,170,000 SCFH / 567,356Nm3/h
Operation Method	Pilot-Operated
Body Material	WCB Steel



Field of Application

OUTLET PRESSURE RANGE psig / bar	AIR	STEAM	TANK BLANKETING	LIQUID	PROCESS GAS	FUEL GAS	TYPE OR SERIES	OPERATION METHOD	BODY SIZE NPS	MAXIMUM INLET PRESSURE, psig / bar	MAXIMUM FLOW CAPACITY, SCFH / Nm³/h
10 to 700 / 0.69 to 48.3	*				*	*	DE0A	Pilot	1,2,3,4 and 4X6	1500 / 103	21,170,000 / 567,356

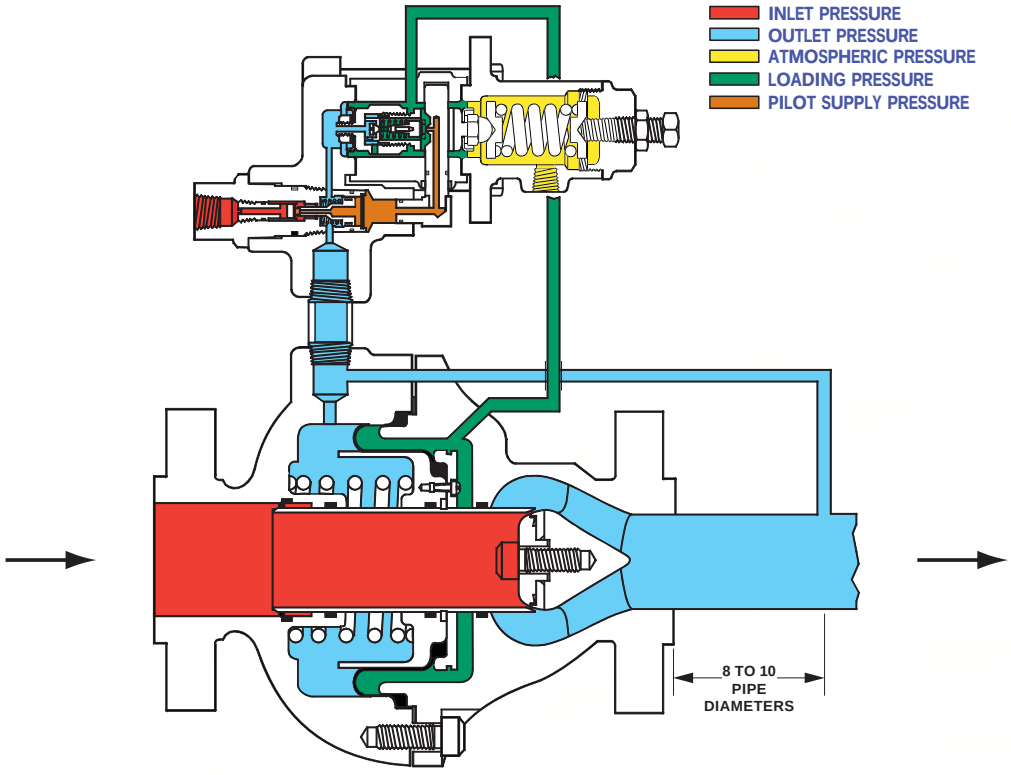

Pressure Reducing Regulator (Direct-operated) Z30

The Z30 Series direct-operated pressure reducing regulators are for low and high-pressure systems. Typical air applications include high-capacity air supply to large valve actuators.

Body Size	NPS 3/4, 1 and 2 / DN 20, 25 and 50
Control Pressure Range	3 to 500 psig / 0.21 to 34.5 bar
Maximum Inlet Pressure	1500 psig / 103 bar
Flow up to	162,000 SCFH / 4342 Nm3/h
Operation Method	Direct-Operated
Body Material	Ductile Iron, Steel and Stainless Steel



Field of Application

OUTLET PRESSURE RANGE psig / bar	AIR	STEAM	TANK BLANKETING	LIQUID	PROCESS GAS	FUEL GAS	TYPE OR SERIES	OPERATION METHOD	BODY SIZE NPS	MAXIMUM INLET PRESSURE, psig / bar	MAXIMUM FLOW CAPACITY, SCFH / Nm³/h
3 to 500 / 0.21 to 34.5	*				*	*	Z30	Direct	1 and 2	1500 / 103	130,000 / 3,484

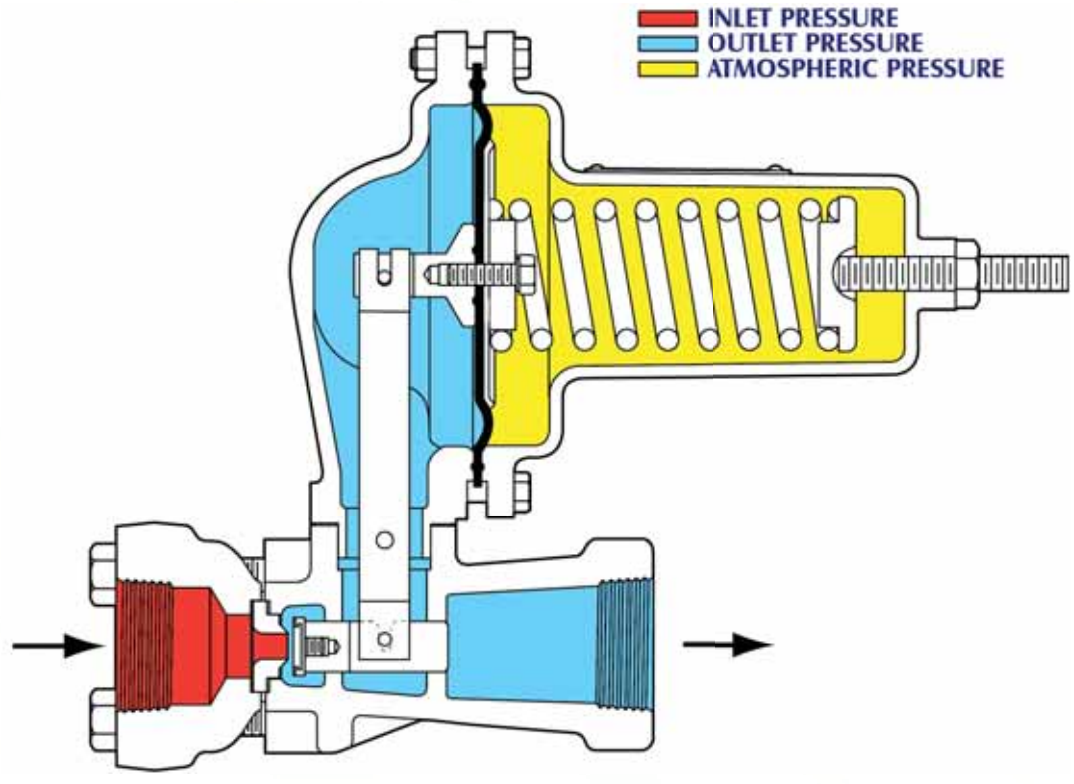

Back Pressure Regulator (Direct-operated) Z30-R

The Type Z30R is a general relief valve that is available in NPS 1 and 2 / DN 25 and 50 body sizes. It is frequently used at compressor stations, refineries and similar plants requiring a back pressure gas regulator for relief pressure settings up to 250 psig / 17.2 bar.

Body Size	NPS 3/4, 1 and 2 / DN 20, 25 and 50
Back pressure Control Range	3 to 250 psig / 10.3 to 17.2 bar
Maximum Inlet Pressure	550 psig / 37.9 bar
Maximum capacity	48,000 SCFH / 1,286 Nm3/h
Operation Method	Direct-Operated
Body Material	Ductile Iron, Steel and Stainless Steel



Field of Application

BACK PRESSURE CONTROL RANGE psig / bar	AIR	STEAM	TANK BLANKETING	LIQUID	PROCESS GAS	FUEL GAS	TYPE OR SERIES	OPERATION METHOD	BODY SIZE NPS	MAXIMUM INLET PRESSURE, psig / bar	MAXIMUM FLOW CAPACITY, SCFH / Nm^3/h
3 to 250 / 0.21 to 17.2	*				*	*	Z30-R	Direct	1 and 2	550 / 37.9	48,000 / 1286

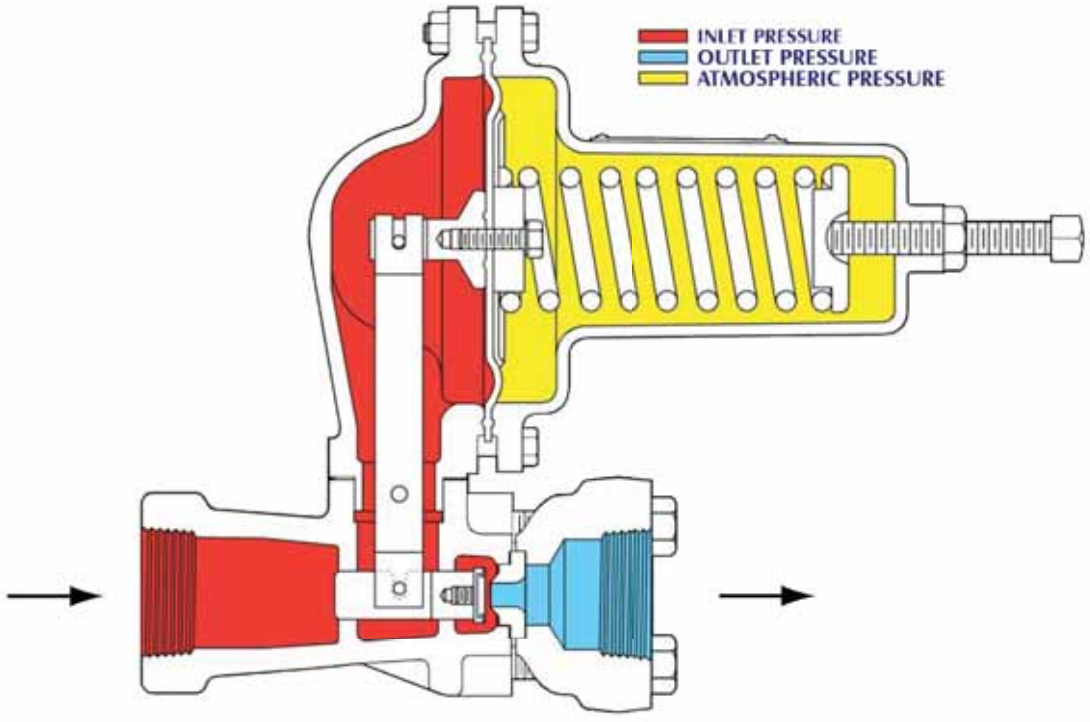

Pressure Reducing Regulator (Direct-operated) MN5R

The MN5R Series is a versatile, compact, high-capacity direct-operated regulator capable of solving the toughest pressure control applications. Typical applications include instrument

* Air supply for large actuators, test fixtures and general pneumatic supply.
* Fuel oil steam atomization, superheated steam, boiler feed water, steam tracing and sterilizers , fuel oil steam atomization, sea water,
* Fire water systems and boiler feed water., oxygen systems, inert gas systems and corrosive gas service.

Body Size	NPS 1/4, 1/2, 3/4, 1, 1-1/2 and 2 / DN 15, 20, 25, 40 and 50
Control Pressure Range	2 to 400 psig / 0.14 to 27.6 bar
Maximum Inlet Pressure	1000 psig / 68.9 bar
Flow up to	510,000 SCFH / 13,668 Nm3/h
Operation Method	Direct-Operated
Body Material	Cast Iron, Steel, Stainless Steel, Hastelloy® C and Monel®



Field of Application

OUTLET PRESSURE RANGE psig / bar	AIR	STEAM	TANK BLANKETING	LIQUID	PROCESS GAS	FUEL GAS	TYPE OR SERIES	OPERATION METHOD	BODY SIZE NPS	MAXIMUM INLET PRESSURE, psig / bar	MAXIMUM FLOW CAPACITY, SCFH / Nm³/h
2 to 400 / 0.14 to 27.6	*	*		*	*	*	MN5R	Direct	1/4 to 2	1000 / 68.9	510,000 / 13,668

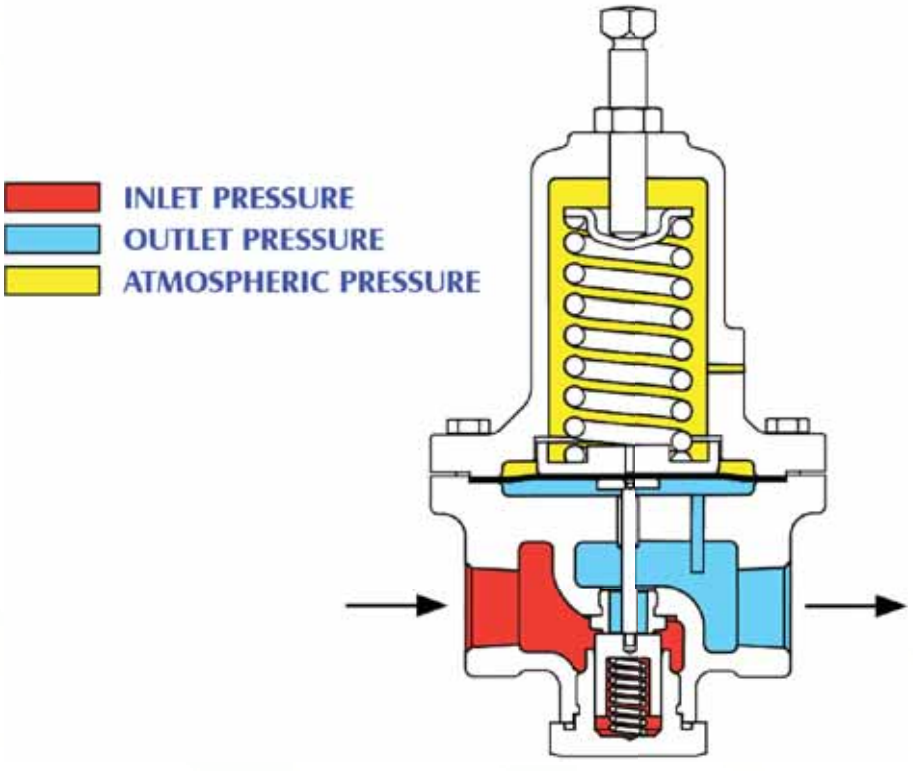

Back Pressure Regulator (Direct-operated) MN8R

The MN8R Series is used in a variety of

* process gas back pressure and relief applications including corrosive gases and cryogenic applications,
* Liquid relief/back pressure applications, such as pump recirculation, lube oil skids, heating and cooling systems and process system.
* Steam in power generation, heating and cooling systems and process system.

Body Size	NPS 3/4, 1 and 2 / DN 20, 25 and 50
Back pressure Control Range	2 to 375 / 0.14 to 25.9
Maximum Inlet Pressure	400 / 27.6
Maximum capacity	300 gpm /1150 l/min
Operation Method	Direct-Operated
Body Material	Cast Iron, Steel, Stainless Steel, Hastelloy® C and Monel®



Field of Application

BACK PRESSURE CONTROL RANGE psig / bar	AIR	STEAM	TANK BLANKETING	LIQUID	PROCESS GAS	FUEL GAS	TYPE OR SERIES	OPERATION METHOD	BODY SIZE NPS	MAXIMUM INLET PRESSURE, psig / bar	MAXIMUM FLOW CAPACITY, SCFH / Nm³/h
2 to 375 / 0.14 to 25.9	*	*		*	*	*	MN8R	Direct	1/4 to 2	400 / 27.6	300 gpm /1150 l/min

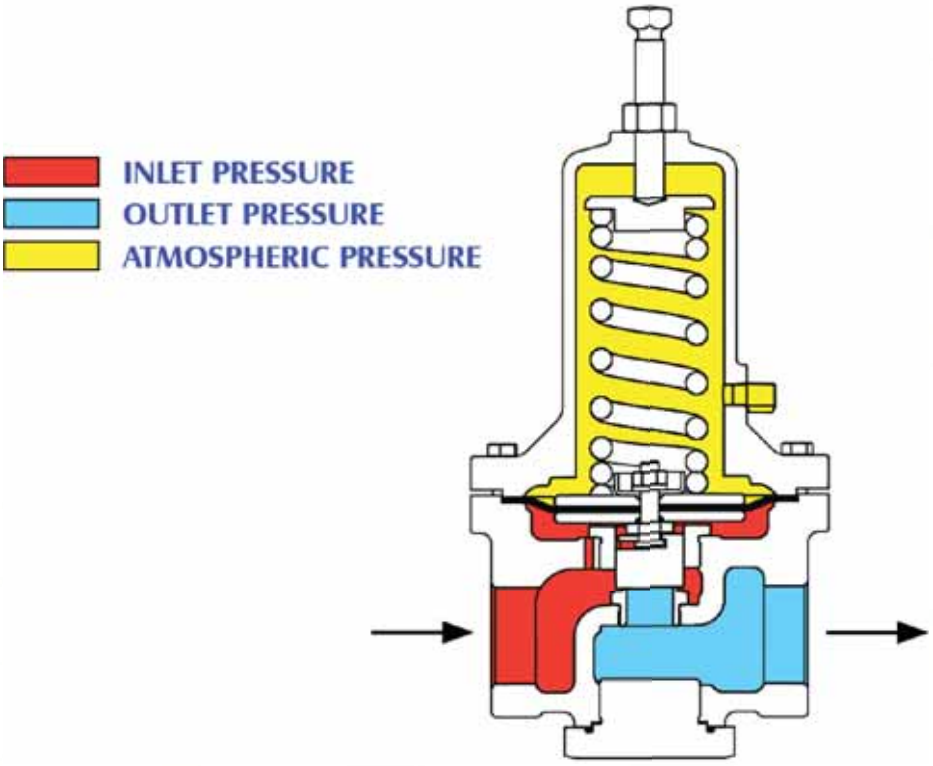

Back Pressure Regulator(Pilot-operated) Z3EG

The Z3EG Series is a compact, fast response, high accuracy back pressure / relief valve which is suitable for gas or liquid service. The valve's design allows easy maintenance and is available with noise reducing trim.

Body Size	NPS 1, 2, 3, 4, 6 and 8 x 6 /DN 25, 50, 80, 100, 150 and 200 x 150
Back Pressure Control Range	10 to 400 psig / 0.69 to 27.6 bar
Maximum Inlet Pressure	400 psig / 27.6 bar
Flow up to	8,795,000 SCFH / 235,706 Nm3/h
Operation Method	Pilot-Operated



Field of Application

BACK PRESSURE CONTROL RANGE psig / bar	AIR	STEAM	TANK BLANKETING	LIQUID	PROCESS GAS	FUEL GAS	TYPE OR SERIES	OPERATION METHOD	BODY SIZE NPS	MAXIMUM INLET PRESSURE, psig / bar	MAXIMUM FLOW CAPACITY, SCFH / Nm³/h
0.5 in. w.c. to 7 / 1 to 0.48	*				*	*	Z3EG	Pilot	NPS 1, 2, 3, 4, 6 and 8 x 6	400 / 27.6	8,795,000 / 235,706

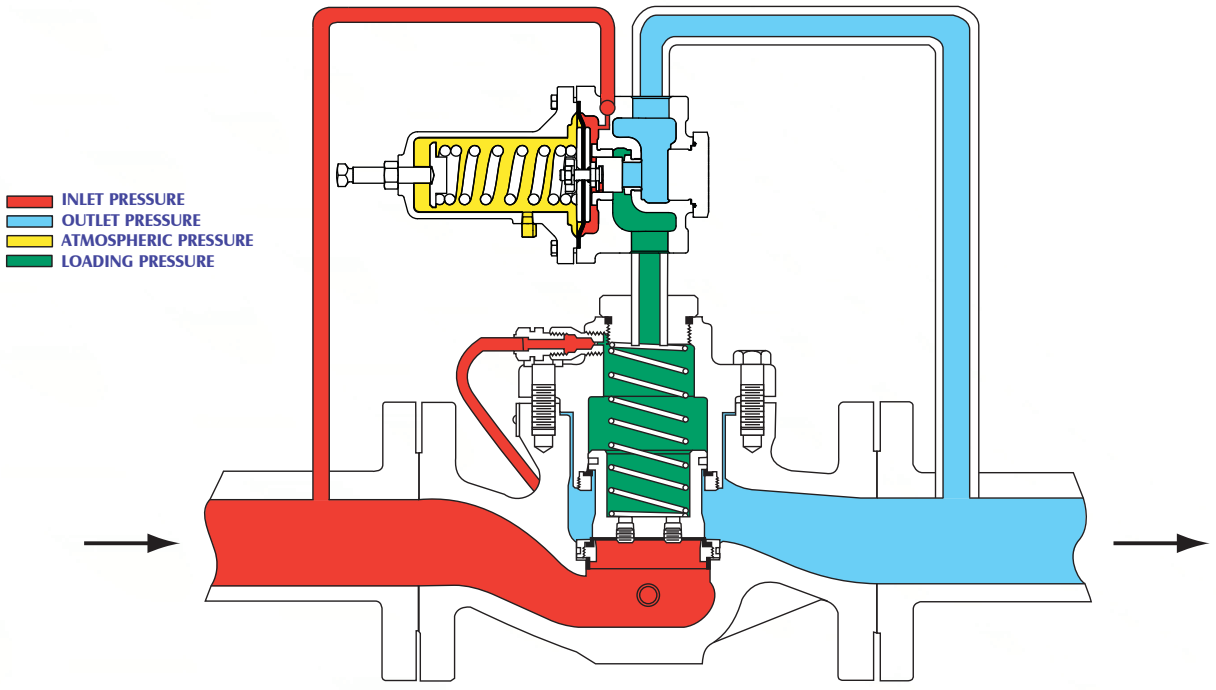

The S7D Series regulators are typically used to deliver constant reduced pressure of gaseous fluids to pilot-operated controllers and other pneumatic instrumentation.

Body Size	NPS 1/2 / DN 15
Outlet Pressure Range	0 to 150 psig / 0 to 10.3 bar
Maximum Inlet Pressure	400 psig / 27.6 bar
Maximum capacity	20,900 SCFH / 560 Nm3/h
Operation Method	Direct-Operated
Body Material	Aluminum and Stainless Steel



Field of Application

OUTLET PRESSURE RANGE psig / bar	AIR	STEAM	TANK BLANKETING	LIQUID	PROCESS GAS	FUEL GAS	TYPE OR SERIES	OPERATION METHOD	BODY SIZE NPS	MAXIMUM INLET PRESSURE, psig / bar	MAXIMUM FLOW CAPACITY, SCFH / Nm^3/h
0 to 150 / 0 to 10.3	*				*	*	S7D	Direct	NPS 1/2	400 / 27.6	20,900 / 560

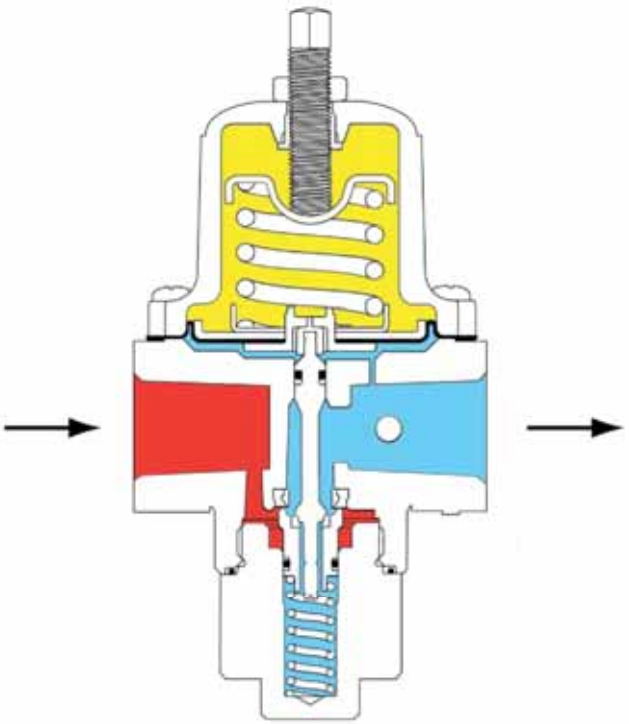



TYPES S7D AND S7DS

INLET PRESSURE
OUTLET PRESSURE
ATMOSPHERIC PRESSURE




GS
Desig
Press
Base
ASM

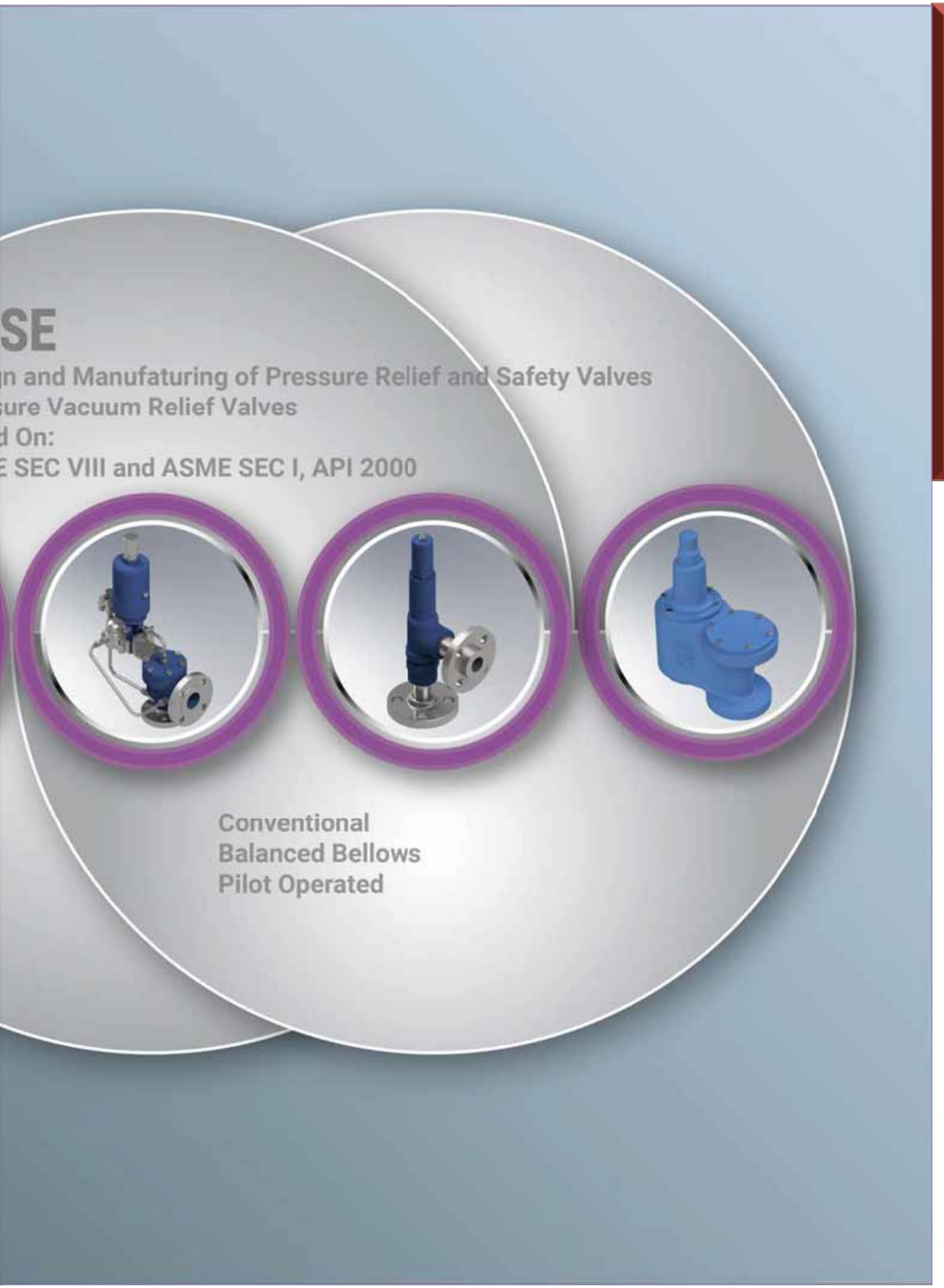
SE
n and Manufaturing of Pressure Relief and Safety Valves
sure Vacuum Relief Valves
d On:
E SEC VIII and ASME SEC I, API 2000
Conventional
Balanced Bellows
Pilot Operated

About safety valves

Safety Valve is a one type of valve that automatically actuates when the pressure of inlet side of the Valve increases to a predetermined pressure, to open the valve disc and discharge the fluid (steam or gas) ; and when the pressure decreases to the prescribed value, to close the valve disc again. Safety valve is so-called a final safety device which controls the pressure and discharges certain amount of fluid by itself without any electric power support. Safety Valve is mainly installed in a chemical plant, electric power boiler, gas storage tank, preventing the pressure vessels from exploding or damaging.

The pressure Relief Valve must open at a predetermined set pressure, flow a rated capacity at a specified overpressure, and close when the system pressure has returned to a safe level. Pressure Relief Valves must be designed with materials compatible with many process fluids from simple air and water to the most corrosive media. They must also be designed to operate in a consistently smooth and stable manner on a variety of fluids and fluid phases.

The basic spring loaded pressure Relief Valve has been developed to meet the need for a simple, reliable, system actuated device to provide overpressure protection.

The Valve consists of a Valve inlet or nozzle mounted on the pressurized system, a disc held against the nozzle to prevent flow under normal system operating conditions, a spring to hold the disc closed, and a body/ Bonnet to contain the operating elements. The spring load is adjustable to vary the pressure at which the Valve will open.

When a pressure Relief Valve begins to lift, the spring force increases. Thus system pressure must increase if lift is to continue. For this reason pressure Relief Valves are allowed an overpressure allowance to reach full lift. This allowable overpressure is generally 10% for Valves on unfired systems. This margin is relatively small and some means must be provided to assist in the lift effort.

Most pressure Relief Valves, therefore, have a secondary control chamber or huddling chamber to enhance lift. As the disc begins to lift, fluid enters the control chamber exposing a larger area of the disc to system pressure.

This causes an incremental change in force which overcompensates for the increase in spring force and causes the Valve to open at a rapid rate. At the same time, the direction of the fluid flow is reversed and the momentum effect resulting from the change in flow direction further enhances lift. These effects combine to allow the Valve to achieve maximum lift and maximum flow within the allowable overpressure limits. Because of the larger disc area exposed to system pressure after the Valve achieves lift, the Valve will not close until system pressure has been reduced to some level below the set pressure. The design of the control chamber determines where the closing point will occur. The difference between the set pressure and the closing point pressure is called blowdown and is usually expressed as a percentage of set pressure. When superimposed back pressure is variable, a balanced bellows or balanced piston design is recommended. A typical balanced bellow is shown on the right. The bellows or piston is designed with an effective pressure area equal to the seat area of the disc. The Bonnet is vented to ensure that the pressure area of the bellows or piston will always be exposed to atmospheric pressure and to provide a telltale sign should the bellows or piston begin to leak. Variations in back pressure, therefore, will have no effect on set pressure. Back pressure may, however, affect flow.

Safety Valve Applicable Standards

ASME SEC I	Boiler applications
ASME SEC VIII	Unfired Pressure Vessel Applications
ANSI / ASME PTC 25.3	Safety and Relief Valves - performance test codes
API RP 520	Sizing selection and installation of pressure relieving devices in refineries, Part 1 Design, Part 2 Installation
API RP 521	Guide for pressure relieving and depressurizing systems
API STD 526	Flanged steel pressure relief valves
API STD 527	Seat tightness of pressure relief valves

Causes of overpressure

There are a number of reasons why the pressure in a vessel or system can exceed a predetermined limit. API Standard 521/ISO 23251 Sect. 4 provides a detailed guideline about causes of overpressure. The most common are:

* Blocked discharge
* Fire case
* Thermal expansion
* Runaway reaction
* Tube rupture in heat exchangers

Applications:

Chemical and petrochemical
Refinery
Power generation
Economizer (Water)
Liquid Phase Thermal Fluid Heaters
Commercial
MSR – Moisture Steam Re-heater
Turbine gland steam seal
Pegging steam/auxiliary steam
De-aerators
Feed-water heaters – tube side and shell side
Pumps – recirculation line protection
Fuel oil pumps
Ammonia systems
Scrubber systems
Air compressor
Miscellaneous pumps
Trim supplied to match the fluid

Types of GSSE Pressure Safety and Relief Valves

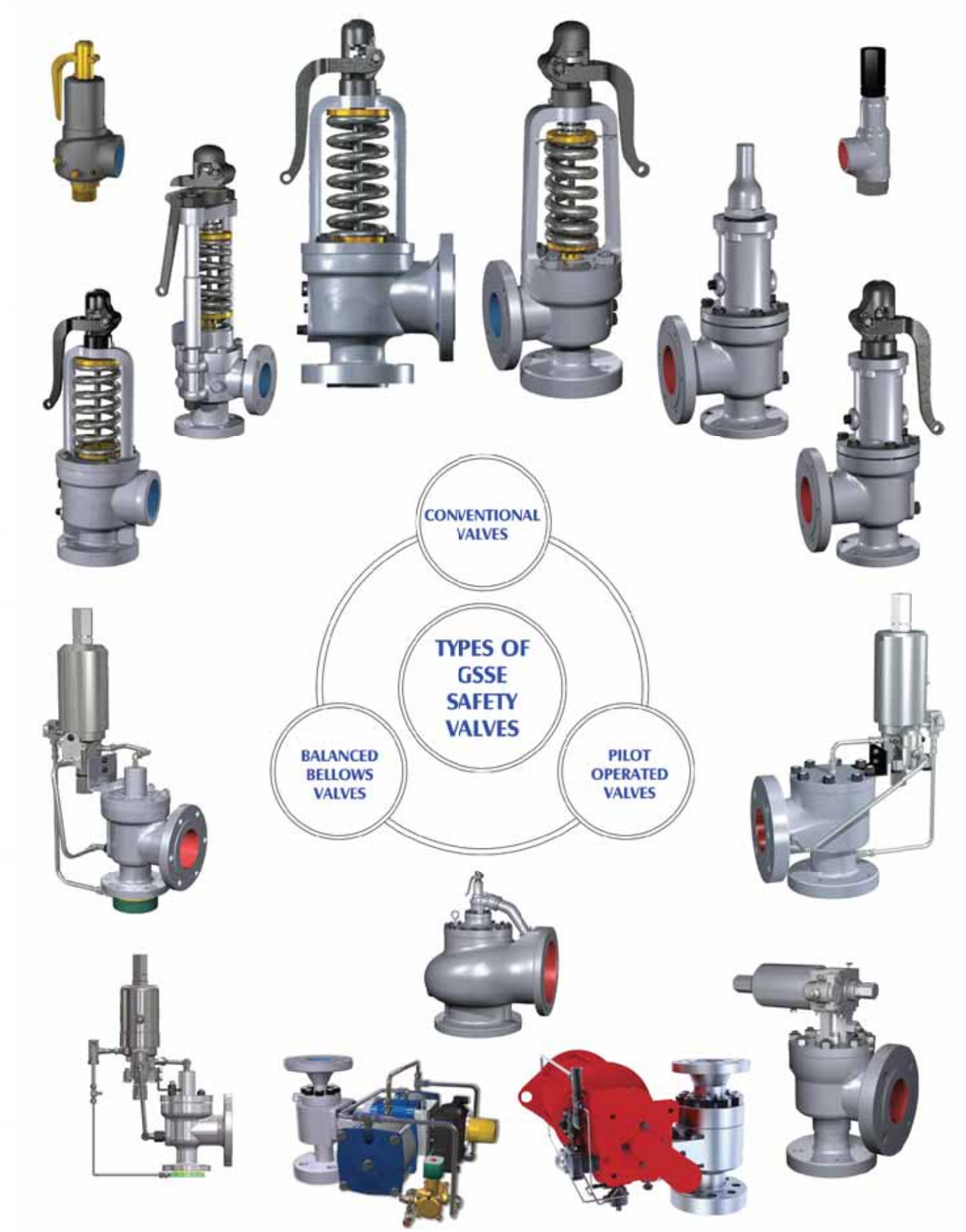

EN00/EN00 DM Series Safety Relief Valve	
The highly adaptable GSSE EN00 Series safety relief valve can meet numerous application requirements.	
Inlet Sizes:	1” through 12”
Inlet Ratings:	ASME Class 150 through 2500 EN 1092-1 PN 10 through PN 400
Outlet Sizes:	2” through 16”
Outlet Ratings:	ASME Class 150 and 300 EN 1092-1 PN 10 through PN 40
Orifice Sizes:	17 sizes - D through W
Set Pressure Range:	4 to 6250 psig (0.27 to 431 barg)
Temperature Range:	-450°F to 1500°F (–268°C to 815°C)
Materials:	Cast carbon steel body with stainless steel trim
Based On:	ASME B&PVC Section I (Liquid), Section III & VIII API 520, 521 and 526 NACE



Options for EN 00 Series Safety Relief Valve

EN 00-30

The EN 00-30 Series valve includes the addition of a balanced bellows that is necessary to compensate for the effects of variable back pressure. By isolating the upper structure and allowing the use of less expensive materials, the bellows is also a cost- effective solution in applications where the valve is exposed to highly viscous or corrosive fluids.

EN 00-DA

The EN 00-DA Series valve contains an additional O-ring seat seal. This soft seat is the primary seal and it allows the valve to remain leak free at 95 percent of set pressure over 100 psig (6.89 barg). A backup metal seat provides additional safety for fire-relief applications when O-rings can be destroyed by high temperature exposure.

The EN 00-DA Series O-ring seat is available for set pressures up to 6250 psig (430.92 barg). Some soft seats offered by other manufacturers are limited to 1500 psig (103,42 barg).

EN00 UM/EN00 DA Series Safety Relief Valve	
The highly adaptable GSSE EN00 Series safety relief valve can meet numerous application requirements.	
Inlet Sizes:	1” through 12”
Inlet Ratings:	ASME Class 150 through 2500 EN 1092-1 PN 10 through PN 400
Outlet Sizes:	2” through 16”
Outlet Ratings:	ASME Class 150 and 300 EN 1092-1 PN 10 through PN 40
Orifice Sizes:	17 sizes - D through W
Set Pressure Range:	4 to 6250 psig (0.27 to 431 barg)
Temperature Range:	-450°F to 1500°F (–268°C to 815°C)
Materials:	Cast carbon steel body with stainless steel trim
Based On:	ASME B&PVC Section I (Liquid), Section III & VIII API 520, 521 and 526 NACE



Options for EN 00-UM Series Safety Relief Valve

EN 00-30-UM

The EN 00-30-UM Series valve includes the addition of a balanced bellows that is necessary to compensate for the effects of variable back pressure. By isolating the upper structure and allowing the use of less expensive materials, the bellows is also a cost-effective solution in applications where the valve is exposed to highly viscous or corrosive fluids.

EN 00-UM-DA Series Soft Seat

The EN 00-UM-DA Series soft seat contains an additional soft seal. This soft seat is the primary seal, and it allows the valve to remain leak free at 95 percent of set pressure over 100 psig (6.89 barg). A backup metal seat provides additional safety for fire-relief applications when soft goods can be destroyed by high temperature exposure. The GSSE EN 00-UM Series soft seat is available for set pressures up to 6250 psig (430.92 barg). Some soft seats offered by other manufacturers are limited to 1500 psig (103,42 barg).

EN000 Series Safety Relief Valve	
Inlet Sizes:	0.5” to 2”
Inlet Ratings:	Threaded and ASME Class 150 through 2500”
Outlet Sizes:	2” through 16”
Outlet Ratings:	Threaded and ASME Class 150 to 300
Orifice Sizes:	0.096 sq. in. through 0.567 sq. in.
Set Pressure Range:	5 to 8000 psig (0,34 to 551 barg)
Temperature Range:	-425°F to 1100°F (–254°C to 593°C)
Materials:	Cast carbon steel body with stainless steel trim
Based On:	ASME B&PVC Section III and VIII
	API 520, 521 and 526
	NACE



Options for EN 000 Series Safety Relief Valve

EN 000-MS Standard Design

Metal-to-metal seat construction. Seat tightness compliant with API 527.

EN 000-DA Series O-Ring Seat Option

Soft seat design offers bubble tight seats at up to 97 percent of valve set pressure for valves set at 101 psig (6.96 barg) and above. This option promotes higher, more efficient system operating pressures without significant seat leakage concerns.

GSSE Safety Relief Valve

EN82 , ZV82





EN82 Series Safety Relief Valve	
Inlet Sizes:	0.5” to 2”
Inlet Ratings:	Threaded
Outlet Sizes:	Threaded
Orifice Sizes:	Four sizes – .121 sq. in. through 1.399 sq. in.
Set Pressure Range:	10 to 500 psig (0,69 to 34,47 barg)
Temperature Range:	-20°F to 800°F (-29°C to 427°C)
Materials:	Cast carbon steel body with stainless steel trim
Based On:	ASME B&PVC, Section III ASME B&PVC, Section VIII, Division I

ZV82 Series Safety Relief Valve	
Inlet Sizes:	0.5” to 2.5”
Outlet Sizes:	0.75” through 2.5”
Outlet Sizes:	Threaded
Outlet Rating:	Threaded
Orifice Sizes:	D, E, F, G, H and J
Set Pressure Range:	15 to 300 psig (1 to 20,68 barg)
Temperature Range:	-325°F to 406°F (-198°C to 208°C)
Materials:	Cast bronze bonnet, brass base and trim and PTFE soft seats
Certifications:	Non-Coded

The EN82 Series safety relief valve is a preferred choice for OEM and skid manufacturers requiring high-relief capacity from a small valve. The EN82 offers superior seat tightness and blowdown performance for most media applications.

The ZV82 Series pressure relief valve features an enclosed design for non-corrosive, thermal relief and liquid service applications.





ZN00 Series Pilot-Operated Safety Relief Valve	
Inlet Sizes:	1” through 12”
Inlet Ratings:	ASME Class 150 through 2500
Outlet Ratings:	ASME Class 150 and 300
Outlet Size:	2” through 16”
Orifice Sizes:	Seventeen sizes – D through W
Set Pressure Range:	15 to 6250 psig (1 to 431 barg)
Temperature Range:	-40°F to 505°F (-40°C to 263°C) Above 505°F with heat exchanger
Materials:	Stainless steel pilot with carbon steel main valve and stainless steel trim
Based On:	ASME B&PVC Section I (Liquid) & Section VIII API 520, 521 and 526 NACE

DN00 Series Pilot-Operated Safety Relief Valve	
Inlet Sizes:	1” through 12”
Inlet Ratings:	ASME Class 150 through 2500
Outlet Ratings:	ASME Class 150 and 300
Outlet Size:	2” through 16”
Orifice Sizes:	Fourteen sizes – D through T (Full bores)
Set Pressure Range:	Full Bores 15 to 6250 psig
Temperature Range:	-40°F to 505°F (-40°C to 263°C) Above 505°F with heat exchanger
Materials:	Stainless steel pilot with carbon steel main valve and stainless steel trim
Certifications:	ASME B&PVC Section I (Liquid) & Section VIII API 520, 521 and 526 NACE

The ZN00 Series pilot-operated safety relief valve combines the advantages of two products into one—the EN00 safety relief valve and the SN00 POSRV. The ZN00 POSRV can replace spring-loaded relief valves without requiring modified outlet piping.

The DN00 Series pilot-operated safety relief valve is a non-flowing design available in a modulating or pop-action pilot. The DN00 POSRV is suitable for the overpressure protection of many pressurized systems and vessels in the chemical, petrochemical, paper mill, oil and gas production and transmission industries.





VN00 Series Pilot-Operated Safety Relief Valve	
Inlet Sizes:	1” to 8”
Inlet Ratings:	ASME Class 150 through 2500
Outlet Ratings:	ASME Class 150 and 300
Outlet Size:	2” through 10”
Orifice Sizes:	Fourteen sizes – D through T
Set Pressure Range:	15 to 7200 psig (1 to 496 barg)
Temperature Range:	40°F to 505°F (-40°C to 263°C)
Materials:	Stainless steel pilot with carbon steel main valve and stainless steel trim
Certifications:	ASME B&PVC Section VIII API 520 and 521 NACE

The VN00 Series pilot-operated safety relief valve is a tubeless valve for oil and gas production and the offshore industry.

ED900 Series Pilot-Operated Safety Relief Valve	
Inlet Sizes:	16” to 20”
Inlet Ratings:	ASME Class 300
Outlet Ratings:	ASME Class 150
Outlet Size:	18” through 24”
Orifice Sizes:	114, 143.1, 176.7 and 201 sq. in.
Set Pressure Range:	50 to 300 psig (3,44 to 20,68 barg)
Temperature Range:	250°F to 550°F (121°C to 288°C)
Typical Application:	Moisture Separator Reheater Systems
Materials:	Carbon Steel with Stainless Steel trim
Certifications:	ASME B&PVC Section VIII API 520 and 521 NACE

The ED900 Series pilot-operated safety relief valve is configured for high-capacity steam overpressure protection for moisture separator reheater systems.

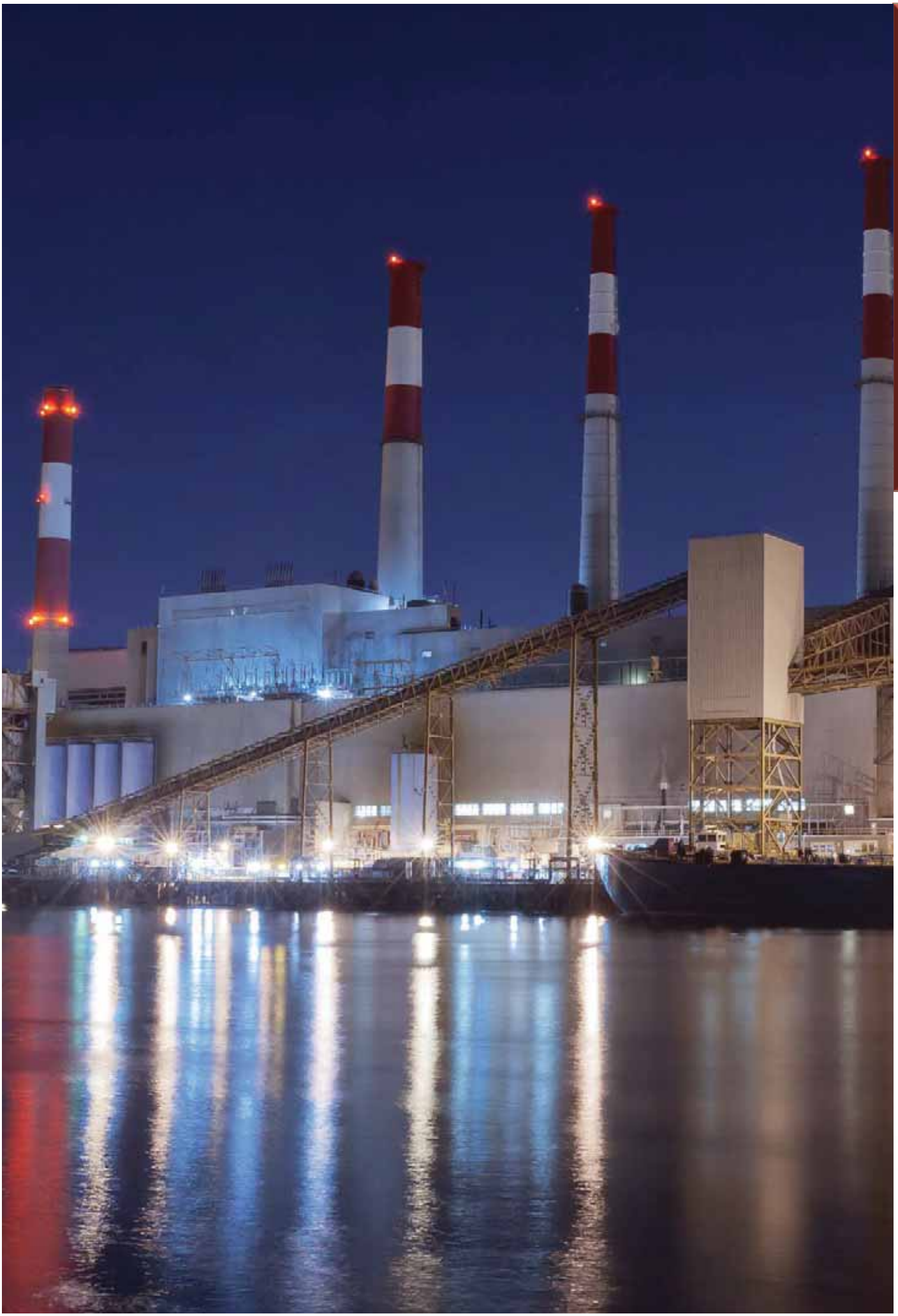

GSSE Boiler Safety Valves

EA11 Series Safety Valve

The GSSE EA11 Series safety valve is a cost-effective, high-capacity, flanged-steel safety valve for steam service.

Inlet Sizes:	1.25” through 6”
Inlet Ratings:	ASME Class 300 and 600
Outlet Sizes:	1.5” through 8”
Outlet Ratings:	ASME Class 150
Orifice Sizes:	10 sizes – F through Q
Set Pressure Range:	15 to 725 psig (1 to 50 barg)
Temperature Range:	Up to 1000°F (538°C)
Materials:	Alloy and carbon steel cast body with stainless steel trim
Based On:	ASME B&PVC Section I and VIII, PED and SQL ISO 4126-1, 4126-3



EF11 Series Safety Valve

The GSSE EF11 Series safety valve is configured for low pressure, steam-heating boilers and steam generators as well as air service applications.

Inlet Sizes:	1.5” through 6”
Inlet Ratings:	ASME Class 250
Outlet Sizes:	2.5” through 4”
Outlet Ratings:	ASME Class 125
Orifice Sizes:	8 sizes – H through Q
Set Pressure Range:	15 to 250 psig (1 to 17,24 barg)
Temperature Range:	-20°F to 420°F (-29°C to 215°C)
Materials:	Cast iron body with brass trim
Based On:	ASME B&PVC Section I and VIII, PED and SQL



GSSE Boiler Safety Valves

EF41, EF43 Series Safety Valve

The GSSE EF41 and EF43 Series safety valves are configured for steam and other compressible fluids. Compression media is limited to non-toxic,non-flammable, non-corrosive service. They are most commonly used in pharmaceutical and process plants.

Inlet Sizes:	.5” through 2.5”
Outlet Sizes:	.75” through 2.5”
Orifice Sizes:	D, E, F, G, H and J
Set Pressure Range:	15 to 350 psig (1 to 24,13 barg)
Temperature Range:	-20°F to 420°F (-29°C to 215°C)
Materials:	Cast iron bonnet with brass base and trim
Based On:	ASME B&PVC Section I and VIII



DF00-5 Series Electromatic Ball Valve

The GSSE DF00-5 Series Electromatic ball valve offers automatic or manual overpressure protection for steam boiler systems, and can also be used to assist start- up and shut-down venting.

Inlet Sizes:	1.5” / 2” / 2.5” / 3” / 4”
Inlet Ratings:	ASME Class 1500, 2500, 3100 and 4500
Outlet Sizes:	3” / 4”/ 6”
Outlet Ratings:	ASME Class 300 and 900
Set Pressure Range:	50 to 6000 psig (3,45 to 414 barg)
Temperature Range:	Up to 1150°F (621°C)
Materials:	Alloy steel body with Colmonoy® coated inconel alloy seat and ball
Baesd On:	ASME B&PVC Section I ‘V’ code stamp on once through boilers (full bore only) andnon-code Section I



GSSE Boiler Safety Valves

EN00/P Series Safety Valve

The GSSE EN00/P Series steam internal series is configured for ASME B&PVC Section I non-power boiler and organic vapor service applications.

Inlet Sizes:	1” through 8”
Inlet Ratings:	ASME Class 150 through Class 2500
Outlet Sizes:	2” through 10”
Outlet Ratings:	ASME Class 150 and 300
Orifice Sizes:	14 sizes – D through T
Set Pressure Range:	5 to 6000 psig (0,34 to 414 barg)
Temperature Range:	-20°F to 850°F (-29°C to 454°C)
Materials:	Carbon steel body with stainless steel trim
Based On:	ASME B&PVC Section I and PED and SQL ISO 4126-1, 4126-3 IBR



ZN00-40 Series Pilot Operated Safety Valve

The GSSE ZN00-40 Series pilot operated safety valve offers superior performance while meeting the stringent requirements of boiler applications. This product is especially suited for economizer service and is certified to ASME B&PVC Code Case 2446. It offers maximum seat tightness and a shorter blowdown that can help to minimize steam loss. It also operates closer to set pressure.

Inlet Sizes:	1” to 12”
Inlet Ratings:	ASME Class 150 through Class 2500 EN 1092-1 PN 10 through PN 400
Outlet Sizes:	2” through 16”
Orifice Sizes:	12 sizes - D through Q
Outlet Ratings:	ASME Class 150 and 300 EN 1092-1 PN 10 through PN 40
Set Pressure Range:	15 to 5800 psig (1 to 400 barg)
Temperature Range:	-40°F to 505°F (-40°C to 263°C) Above 505°F with heat exchanger
Materials:	Main Valve: Carbon steel base and 316 stainless steel internal components Pilot Valve: 316 stainless steel base and internalcomponents
Based On:	ASME B&PVC Section I ISO 4126-4



GSSE Boiler Safety Relief Valves

ES00 Series Maxiflow Safety Valve

The GSSE ES00 Series Maxiflow high pressure safety valve is a premium product that is installed on the majority of power generating stations worldwide to help protect boilers from overpressure conditions.

Inlet Sizes:	1.5” through 8”
Inlet Ratings:	ASME Class 600 through 4500 Flanged and BWE
Outlet Sizes:	3” through 10” flanged
Outlet Ratings:	ASME Class 150 and 300
Orifice Sizes:	11 sizes – 1 through T
Set Pressure Range:	100 to 5800 psig (6,90 to 400 barg)
Temperature Range:	Up to 1200°F (649°C)
Materials:	Alloy and carbon steel cast body with stainless steel trim
Based On	ASME B&PVC Section I and VIII, PED and SQL ISO 4126-1, 4126-3 IBR



ZS00 Series Safety Valve

The GSSE ZS00 Series safety valve can meet the specific requirements of the co-generation and waste-to- energy markets.

Inlet Sizes:	1.5” through 6”
Inlet Ratings:	ASME Class 600, 900 and 1500
Outlet Sizes:	3” through 8”
Outlet Ratings:	ASME Class 150 and 300
Orifice Sizes:	7 sizes – 1 through Q
Set Pressure Range:	100 to 1600 psig (6,90 to 110 barg)
Temperature Range:	Up to 1050°F (565°C)
Materials:	Alloy and carbon steel cast body with stainless steel trim
Based On:	ASME B&PVC Section I and VIII, PED and SQL ISO 4126-1, 4126-3 IBR






GS
Desig
Sprin
Pisto

SE

n and Manufaturing of Actuators:
g Diaphragm
n Spring Return



Scotch Yoke Spring Return and Double Acting
MOV
Electrohydralic

GSSE TYPES OF ACTUATORS AND INSTRUMENTS



DM



PS



ELH



RG



QT



RP



SY



EGA



Digital Smart Hart and FF Positioner



Volume Booster



P to P VS00 Positioner



Air

GSSE SERIES	DESIGN		FRAME SIZE	MAX. OPERATING PRESSURE	TRAVEL RANGE	OPERATING ENERGY		
	LINEAR	ROTARY		PSI		PENUMATIC	HYDRAULIC	ELECTRIC
DM	*		6, 10, 16, 23	60	0.8-2.5 INCH	*		
PS	*		6, 8, 12, 16, 20	150	2.5-12 INCH	*		
PSH	*		1	3000	12 INCH		*	
ELH-L	*		1 1	2250	20 INCH			*
ELH-Q		*	1	2250	90 DEG			*
QT		*	8, 10, 18	60	90 DEG	*		
RD		*	41/2, 6, 7, 9	60	90 DEG	*		
RP		*	8 SIZES	100	90 DEG	*		
PQ		*	9 SIZES	100	90 DEG	*		
SY		*	9 SIZES	100	90 DEG	*		
SYH		*	9 SIZES	1500	90 DEG		*	
EGA	*	*	11 SIZES		MULTI TURN			*

VS 00 P to P fully stainless steel positioner suitable for direct sour gas application

Digital Smart Hart and Foundation Field Bus Electero Punematic Positioner

Voulme Booster for fast Stroking Applications

High and Low Cv Air set for different Applications

DS Series

DS Series is a pneumatic actuator with single spring and diaphragm in tow type (Direct & Reverse) designed to provide high performance.

Features

Heavy One-Piece Yoke

Provides maximum strength and rigidity.

Diaphragm Cases

Pressed steel upper and lower cases combine lightness, high mechanical strength and adequate protection in the event of severe over-pressurization.

Thrust Capability

Two actuator types and six sizes provide a wide range of applications.

Diaphragm

Molded elastomer with fabric insert for strength, long life and high sensitivity.

Linearity

The molded diaphragm and deep cases minimize area change and produce a linear relationship between travel and air pressure .

Numbering System

1st	2nd	3rd
D	S	

Actuator Type
“D” Air to Close
“R” Air to Open



Direct: Air To Close (Fail To Open) “DSD”



Reverse: Air To Open (Fail To Close) “DSR”

Construction & Material Combination

ITEM	PART NAME	MATERIAL
1	Spring Guide	CARBON STEEL
2	Diaphragm Case	CARBON STEEL
3	Diaphragm Plate	CARBON STEEL
4	Diaphragm Washer	CARBON STEEL
5	Packing Box	BRASS
6	Stem Hex Nut	ASTM A194 GRADE 2H
7	Packing Nut	BRASS
8	Spring Adjuster	CARBON STEEL
9	Spring Barrell Cap	CAST IRON
10	Spring Barrell	CAST IRON
11	Spring Button	NICKEL COPPER ALLOY
12	Spring	SPRING STEEL
13	Yoke	CAST IRON
14	Actuator Stem	304 STAINLESS STEEL
15	Travel Indicator Scale	STAINLESS STEEL
16	Name Plate	STAINLESS STEEL
17	Machine Screw	STAINLESS STEEL
18	Snap Ring	CARBON STEEL
19	Diaphragm	NEOPRENE
21	Gasket	GRAPHITE
22	Case Screw	ASTM A193 GRADE B7
23	Case Nut	ASTM A194 GRADE 2H
24	Packing Box Gasket	COPPER
25	Yoke Packing	PTFE

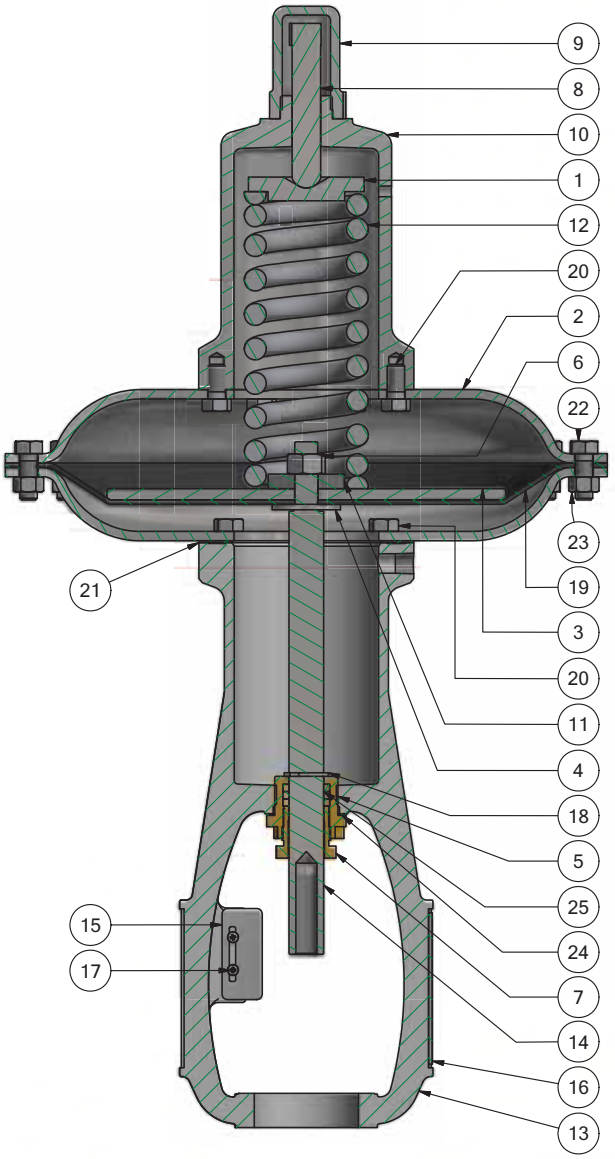

Specifications

Actuator Size	Nominal Effective Area		Maximum Travel		Bench Range (psi)		Maximum Supply (psi)	Travel Time (Seconds) (1)		Weight (Kg)	
	(sq. in.)	(sq. cm.)	(in.)	(mm)				EPP (2)	PP (3)	DSD	DSR
07	46	297	0.75	19.1	3-15	6-30	60	3	6	16	15
11	71	458	1	25.4			60	3.3	7	20	25
13	105	667	1.5	38.1			60	6.3	13	32	40
15	145	935	2	50.8			60	11.4	20	55	64
18	200	1290	4	76.2			60	32	48	82	114
24	330	2130	4	76.2			55	38	54	148	245

NOTE:
Additional travels and spring ranges available.
(1) Measured by 3-15 psi bench range and 20 psi supply. For 6-30 psi bench range, increase travel time by 15%.
(2) Electro-pneumatic Positioner.
(3) Pneumatic Positioner .

DM Series

DM Series is Multi Spring diaphragm pneumatic actuator designed to provide high performance.

Features

Heavy One-Piece Yoke

Provides maximum strength and rigidity.

Diaphragm Cases

Pressed steel upper and lower cases combine lightness, high mechanical strength and adequate pro-tection in the event of severe over-pressurization.

Thrust Capability

Two Linear Spring Diaphragm actuator types and seven sizes provide a wide range of applications.

Diaphragm

Molded elastomer with fabric insert for strength, long life and high sensitivity.

Linearity

The molded diaphragm and deep cases minimize area change and produce a linear relationship be-tween travel and air pressure .

Field Reversible

Air action can be changed without additional parts.

Numbering System

1st	2nd	3rd
D	M	

Actuator Type
“7” Air to Close
“8” Air to Open



Construction & Material Combination

ITEM	PART NAME	MATERIAL
1	Yoke	GRAY CAST IRON
2	Diaphragm	BUNA-N W/POLYESTER
3	Diaphragm Plate	ALUMINUM
4	Actuator Stem	316 STAINLESS STEEL
5	Washer	CARBON STEEL
6	Jam Nut	CARBON STEEL
7	Spring Spacer	CAST IRON
8	Stem Bushing	BRONZE
9	Upper Diaphragm Case	CARBON STEEL
10	Spring Guide	CARBON STEEL
11	Connector Insert	CARBON STEEL
12	Bottom Stem Connector	CARBON STEEL
13	Top Stem Connector	CARBON STEEL
14	Socket Head Cap Screw	ALLOY STEEL
16	Compression Nut	CARBON STEEL
15	Stem Wiper	POLYURETHANE
17*	Hex Head Cap Screw	CARBON STEEL
18*	Seal Washer	STEEL & RUBBER
19	Spacer	CARBON STEEL
20	Internal O-ring	VITON
21	External O-ring	VITON
22*	Pointer	STAINLESS STEEL
23*	Scale - Travel	STAINLESS STEEL
24	Hex Nut	CARBON STEEL
25	Hex Head Case Screw	CARBON STEEL
26	Hex Head Case Nut	CARBON STEEL
27	Compression Screw	CARBON STEEL
29	Spring	SPRING STEEL
30*	Case Plug	CARBON STEEL
31	Pan Head Screw	CARBON STEEL
32	Lower Diaphragm Case	CARBON STEEL

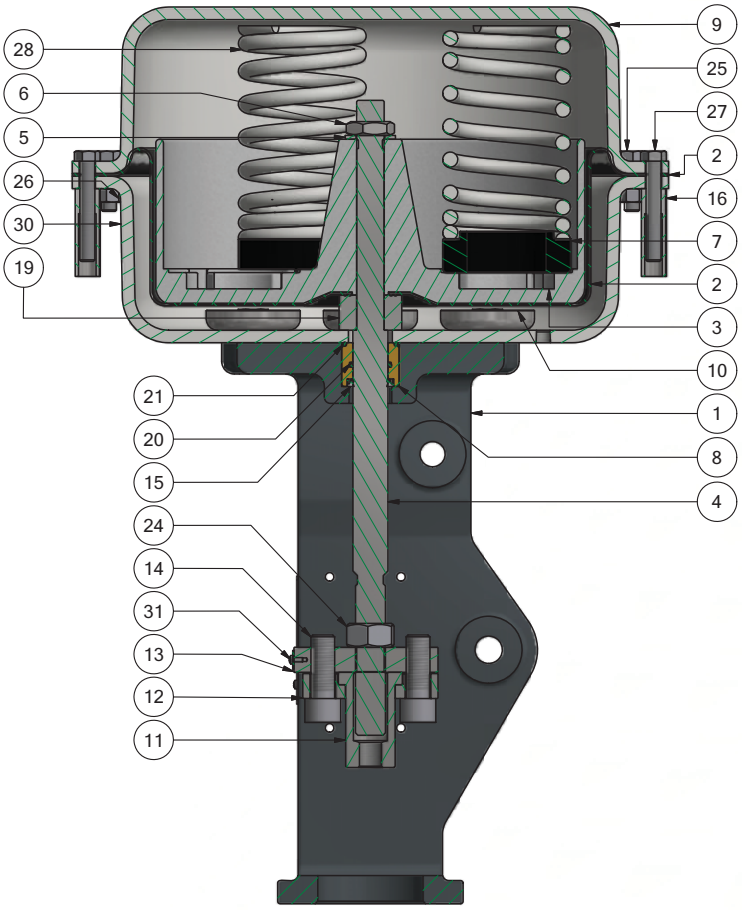

Specifications

Actuator Size	Nominal Effective Area		Maximum Travel		Bench Range (psi)				Maximum Supply (psi)	Travel Time (Seconds) (1)		Weight (Kg)
	(sq. in.)	(sq. cm.)	(in.)	(mm)						EPP (2)	PP (3)	
06	60	387	0.8	20.3	3-15	6-30	11-23	21-45	60	2	2	20
10	100	645	1.5	38.1						14	6	38
16	160	1032	2.5	63.5						13	10	95
23	230	1484	2.5	63.5						30	20	120

NOTE:
(1) Measured for DM8 type by 3-15 psi bench range and 20 psi supply (in maximum travel). For DM7 type, increase travel time by 5% to 15%.
(2) Electro-pneumatic Positioner .
(3) Pneumatic Positioner

PS Series

PS series are cylinder pneumatic actuators with high power actuating units, for use in on/off or mod-ulating service, have a thrust capability which is much greater than similar size diaphragm spring actuators due to air pressure up to 150 psi (10 bar) being used.

Features

Rugged Construction

Heavy internal guiding and support provides proper alignment of the dynamic components, delivering a rugged construction suited for the most demanding valve actuation requirements.

Long Life Cycle

Heavy guiding of the actuator stem results in excellent mechanical alignment of the key components, thus minimizing dynamic seal and sliding surface wear. This also helps to reduce overall operating friction, which enhances throttling control performance.

Application Versatility

Standard construction options include double-acting without springs, as well as heavy mechanical spring-return for both air-to-extend and air-to-retract operation. Air volume in the cylinder is reduced in each design, providing high dynamic stiffness and improving speed of response.

Safety and Ease of Assembly

The standard spring-return design includes separate spring cartridge sub assemblies, which allows for safe pre-compression of the springs prior to final assembly into the actuator cylinder. The spring cartridge subassembly is also fully field reversible, which helps to reduce plant inventory.

Ease of Maintenance

Modular construction of the cylinder and spring cartridge design provides an assembly that is both easy and safe to maintain. The actuator piston is located in a separate cylinder chamber, which allows for simple dynamic seal replacement.

Manual Override

Optional handwheel assemblies provide manual override in case of air failure.

Integral Volume Tank

Fail action mode for the double-acting configuration without springs can be provided using an integral volume tank design.

Numbering System

1st	2nd	3rd
P	S	

Actuator Type
“D” Air to Close
“R” Air to Open
“U” Double Acting



Construction & Material Combination

ITEM	PART NAME	MATERIAL
1	Top plate	Ck45
2	Upper spring button 175	Cast Iron
3	Lower Spring Button 175	Ductile Iron
4	Spring tube	A106
5	Separator plate	Ductile Iron
6	Cylinder tube	A106 Inside Chrome Plated
7	Guide Bushing Upper Spring Button	Phosphore Bronze
8	Guide Bushing Seprator Plate	Phosphor Bronze
9	Center Bolt	Mo40
10	Set Screw	Stainless Steel
11	Rod scraper	Nitrile (Buna-N)
12	Yoke Guide Bushing	Phosphor Bronze
13	Retaining Ring	Stainless Steel
14	Stem O-Ring	Nitrile (Buna-N)
15	Piston	Ck45
16	Spring	DIN 1.8159
17	Yoke	Ductile Iron
18	Thrust Ball Bearing	Chrome-Alloy Steel
19	Guide Ring	Graphite / Teflon
20	Piston O-Ring	Nitrile (Buna-N)
21	Yoke Internal O-Ring	Nitrile (Buna-N)
22	Compression Nut	Stainless Steel 410
23	Bearing Thrust	Mo40 ZP
24	Compression Bolt	Mo40 ZP
25	Stem	Stainless Steel A564
26	Back Stem Connector	Mo40 ZP
27	Front Stem Connector	Mo40 ZP
28	Eye Bolt.Metric Version.Left Hand	Stainless Steel
29	Eye Bolt.Metric Version.RIGHT HAND	Stainless Steel
30	Take Off Rod	Stainless Steel
31	Turn buckle.46	Brass
32	Hex Jam Nut	Stainless Steel
33	Socket Head Cap Screw	Carbon Steel ZP-Gr8.8
34	Hex Bolt	Stainless Steel
35	Nut (Positioner)	ASTM A194 Gr.2H
36	Scale - Travel 3.5 in	Stainles Steel 316
37	Pan Head Screw	Stainless Steel
38	Pin	Carbon Steel
39	Spacer	Ck45
40	Hex Nut	Carbon steel ZP-Gr8.8
41	Spring lock Washer	Carbon Steel ZP

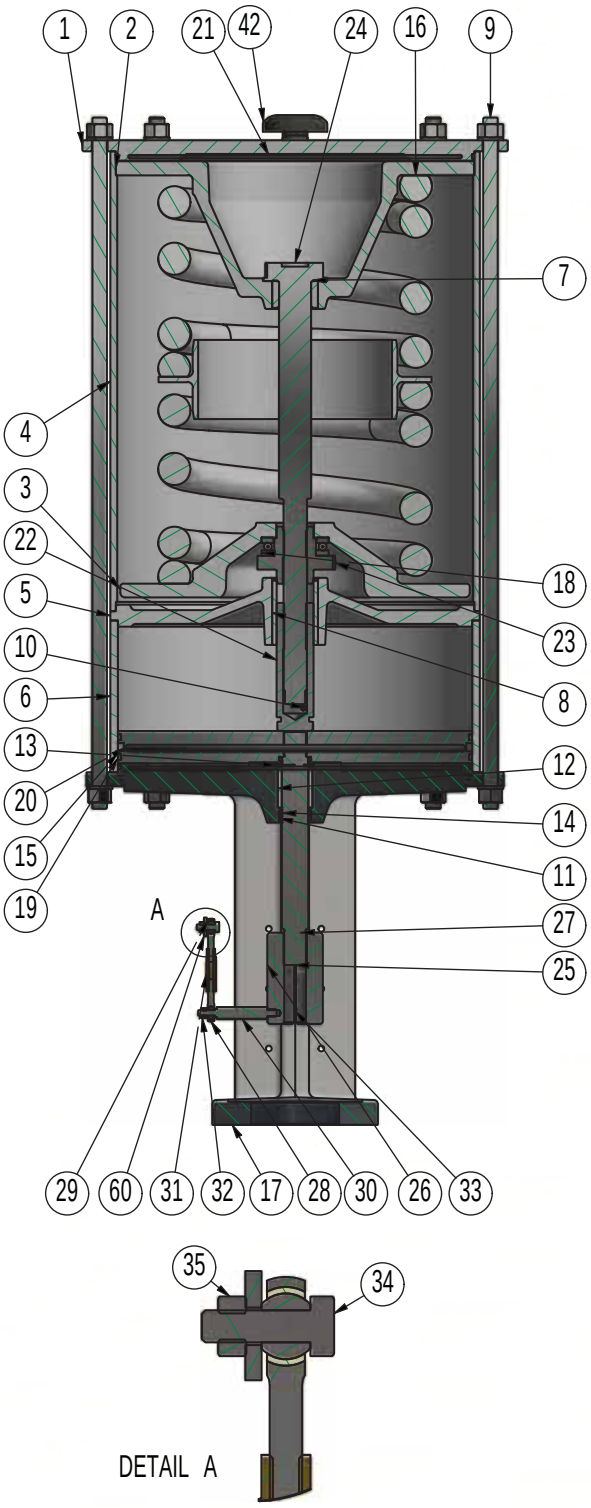

Specifications

Actuator Size	Nominal Effective Area		Maximum Travel		Spring Range (psi)			Maximum Supply (psi)	Travel Time (Seconds) (1)		Weight (Kg)
	(sq. in.)	(sq. cm.)	(in.)	(mm)					P (2)	B (3)	
6	28.3	182	4	101.6	10-25	20-40	25-50	150	3	2	9.5
8	50.3	325	2.5	63.5					5	2	16.3
12	113.1	729	6	152.4					42	8	38.6
16	197	1271	12	304.8					150	29	155
20	287	1854	6	152.4					109	22	290

Note:

(1) Speed depends upon positioner selected, and size fittings and pipe work.

(2) Data based upon digital positioner calibrated at 4-20ma and 7 barg air supply.

(3) Booster fitted to top and bottom ports of actuator, with 1/4 inch fittings between cylinder and boosters, and separate 1/2 inch diameter feed for boosters. 7 barg air supply used.

For sizes or strokes and spring range outside these listed or faster stroke speeds consult factory.

PSH Series

PSH series are cylinder Hydraulic actuators with high power actuating units, for use in on/off or modulating service, have a thrust capability to Hydraulic pressure up to 1500 psi (100 bar) being used.

Features

- Electroless nickel plated and polished cylinder for corrosion resistance and minimal friction.
- Hard chromium plated and polished piston rod in stainless steel for corrosion resistance and minimum friction.
- Piston rod support bushing in bronze with sintered PTFE provides minimal friction and extended service life.
- Enclosed spring cartridge ensures personnel safety during assembly or disassembly.
- Fabricated carbon steel adapter spool with accessories provision designed specifically for adaptation to any type of valve.
- Accept an extensive range of accessories:
  - Complete control panel
  - Emergency tank
  - Manual hand pump
  - PST device
- Special coatings for offshore or corrosive environments available on request.

Numbering System

Model Number	Actuator Type	Actuator Size
PSH	X	XX

“C” Fail to Close
“O” Air to Open
“D” Double Acting



Construction & Material Combination

Item	Part Name	Mateial
1	Yoke	ST 52
2	Screw	A193 B7
3	Spring Barrel	A 106
4	Spring Lower Plate	GGG 40
5	Spring	Alloy Steel
6	Stem	Stainless Steel
7	Spring Upper Plate	GGG 40
8	Hydraulic Cylinder Bottom	Carbon Steel
9	Hydraulic Cylinder	Carbon Steel Plated
10	O-Ring	Nitrile
11	Piston	Carbon Steel
12	Hex Nut	A194 H2
13	Stud	A193 B7
14	Cap	Carbon Steel
15	Eye Bolt	Carbon Steel

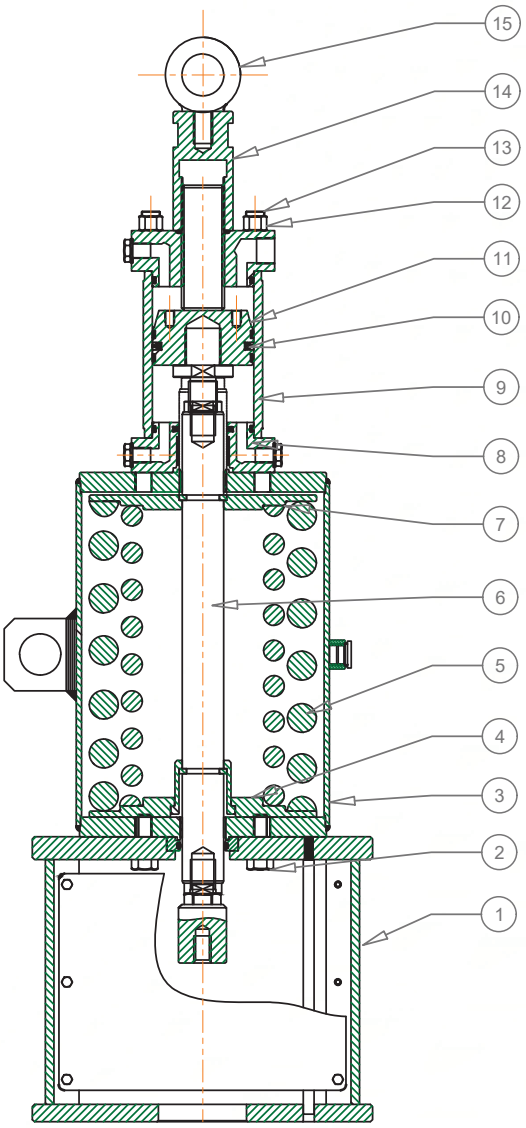

Specifications

Actuator Series	Maximum Allowable Trust	Cylinder Diameter	Spring Ending Trust	Stroke	Spring Action		Ambient Temperature		Manual Override	
PSH	(Kn)	(mm)	(Kn)	(mm)	Close	Open	°C		HW	Hand Jack
	250	135	100	300			-20	+100		

NOTE:

1 Speed might varies with inlet Pressure.

2 Electro-Hydraulic digital positioner will be installed on this actuator.

3 Dimensions are dependent on the valve stroke and trust for each actuator.

QT Series

QT series are quarter turn pneumatic spring diaphragm actuators. This series designed to provide high performance, reliability and long service life.

Features

Field Reversible

Air action can be changed without additional parts.

Diaphragm Cases

Pressed steel upper and lower cases combine lightness, high mechanical strength and adequate protection in the event of severe over-pressurization.

Diaphragm

Molded elastomer with fabric insert for strength, long life and high sensitivity.

Linearity

The molded rolling diaphragm and deep cases minimize area changes providing a more linear relationship between travel, air pressure and output torque.

Separate Interchangeable Yoke

Allows flexible mounting options to a variety of rotary valves. Yoke and mounting parts are available for GSSE rotary valves as well as a universal mounting that is adaptable to other quarter turn valve designs.

Numbering System

Model Number	Actuator Type	Actuator Size
QT	X	XX

"C" Increasing Air Pressure Rotates Counter Clockwise
"O" Increasing Air Pressure Rotates Clockwise



Construction & Material Combination

ITEM	PART NAME	MATERIAL
1	Diaphragm	Ethylene Propylene
2	Diaphragm Plate	DIN GGG40
3	Lower Diaphragm Casing	DIN St 37
4	Spring Guide	DIN St 37
5	Stopper Plate	DIN St 37
6	Trunnion Block Plug	Stainless Steel 316
7	Trunnion Block	Stainless Steel 316
8	Spring Stem	ASTM A564 Gr 630
9	Hex Nut	ASTM A194 Gr.2H
10	Seal Washer	Stainless Steel/Viton
11	Pin	Stainless Steel 316
12	Lever Set	DIN St 52
13	Box	Acc. to BOM
14	Washer	Steel
15	Scale Travel	Stainless Steel 316
16	Compression Nut	Steel
17	Hex Nut	Steel
18	Hexagon Socket Screw	Stainless Steel
19	67CFR Bracket	Steel
20	Hex Bolt	ASTM A193 Gr.B7
21	Hex Bolt	ASTM A193 Gr.B7
22	Upper Diaphragm Casing	Acc. to BOM
23	Rod End Bearing Eye Bolt	Steel/Bronze
24	Retaining ring	Stainless Steel
25	Hex Bolt	ISO Gr. 8.8
26	Stopper	Steel
27	Spring Washer	Steel
28	Drive Nut	Steel
29	Stopper Ring	Steel
30	Washer	Steel
31	Hex Bolt	ASTM A193 Gr.B7
32	Ball Bearing	Stainless Steel
33	Accesory Drive	Stainless Steel 304
34	Hex Bolt	ASTM A193 Gr.B7
35	Retaining Ring	Stainless Steel
36	Spring	Oil Temper (OT)
37	Not Shown	
38	Cap Screw	Steel

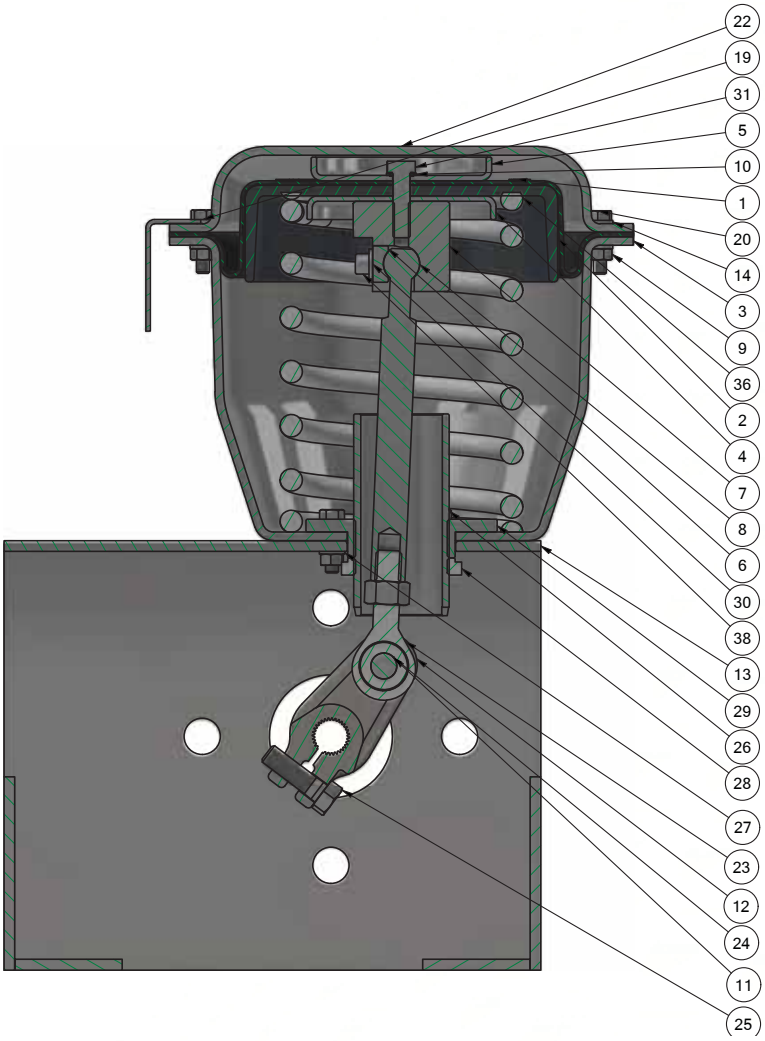

Specifications

Actuator Size	Nominal Effective Area		Torque (N.M)						Travel Time (Seconds) (1)		Weight (Kg)
			Spring Range 40 psi		Spring Range 60 psi		Spring Range 80 psi				
	(sq. in.)	(sq. cm.)	Spring End	Air End	Spring End	Air End	Spring End	Air End	Air	Spring	
8	19	122.6	15.2	29.3	34.9	34.9	52.5	36	2	2	13
10	33	212.9	78.5	89.8	156.5	112.4	202.8	159.2	5	1.5	33
18	99	638.7	359.2	417.5	549.7	622.4	764.3	801.6	3	2	107.5

NOTE:

(1) Time may vary due to application.

RD Series

RD series are quarter turn pneumatic spring diaphragm actuators. This series designed to provide high performance, reliability and long service life.

Features

Diaphragm Cases

Pressed steel upper and lower cases combine lightness, high mechanical strength and adequate protection in the event of severe over-pressurization.

Diaphragm

Molded elastomer with fabric insert for strength, long life and high sensitivity.

Linearity

The molded rolling diaphragm and deep cases minimize area changes providing a more linear relationship between travel, air pressure and output torque.

Separate Interchangeable Yoke

Allows flexible mounting options to a variety of rotary valves. Yoke and mounting parts are available for GSSE rotary valves as well as a universal mounting that is adaptable to other quarter turn valve designs.

Modular Spring Pack

Three standard spring ranges are achievable using two springs either, individually or combined.

Numbering System

Model Number	Actuator Type	Actuator Size
RD	X	XX

"C" Increasing Air Pressure Rotates Counter Clockwise
"O" Increasing Air Pressure Rotates Clockwise

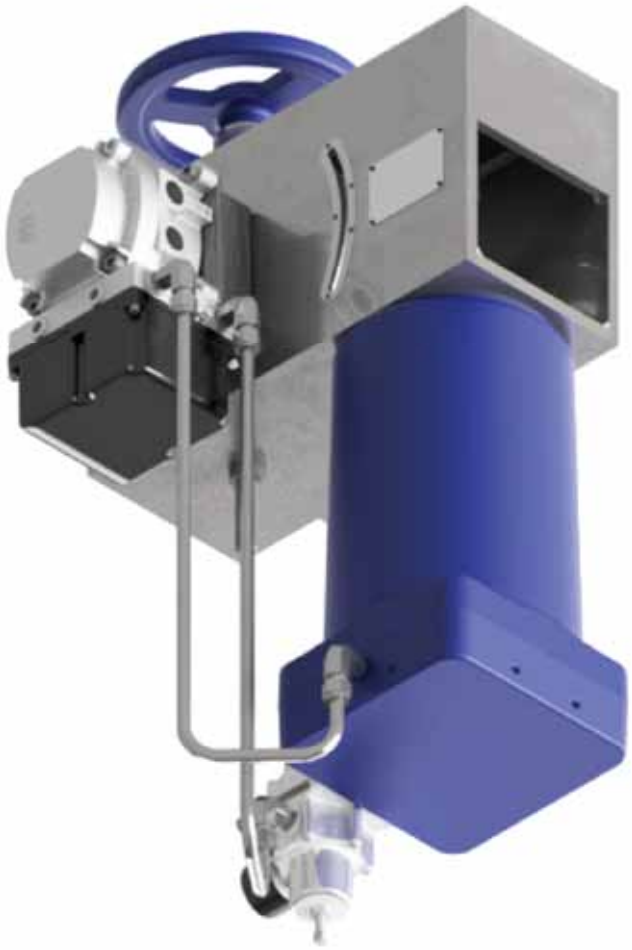

Construction & Material Combination

Item	Part Name
1	Diaphragm Case
2	Cap Screw
3	Diaphragm
4	Diaphragm Plate
5	Spring
6	Spring Barrel
7	Lock Washer
8	Cap Screw
9	Clevis
10	Plate Screw
11	Serial Plate
12	Adjustable Indicator
13	Indicator Screw
14	Lever
15	Boss Cover
16	Yoke
17	Lock Nut
18	Lock Nut
19	Lock Washer
20	Limit Stop
21	Nut
22	Lever Cap Screw
23	Truarc Ring
24	Handwheel Washer
25	Handwheel Lock
26	Handwheel Shaft

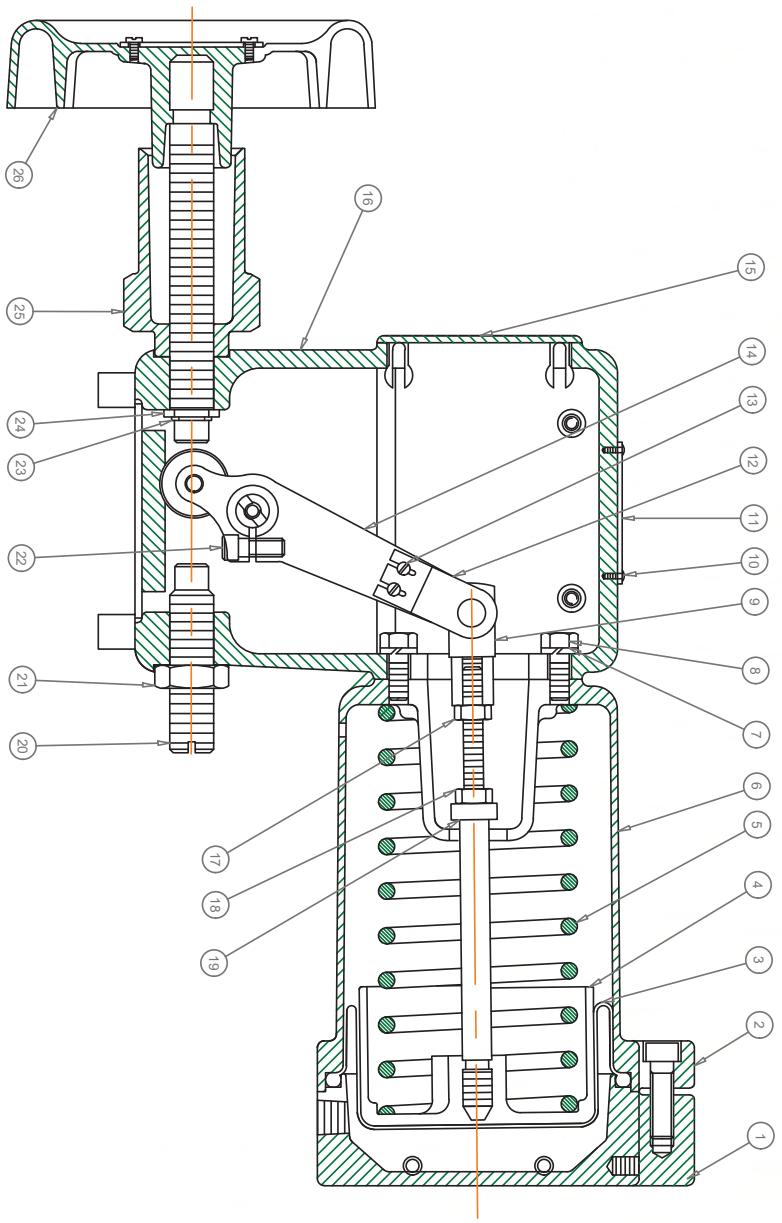

Specifications

Actuator Diameter		Diaphragm Effective Area		Actuator Stroke		Travel Time (sec.)	
In.	Cm	Sq.In.	Cm2	In.	Cm	Increasing Instrument Signal	Decreasing Instrument Signal
4½	11.4	14	90	3½	8.9	1.2	2.4
6	15.2	24	155	5¾	14.6	3	6.3
7	17.8	36	232	7¼	18.4	7.6	9.8
9	22.9	75	483	7¼	18.4	17	24

PQ Series

PQ series are quarter turn pneumatic Compact spring piston actuators. This series designed to provide high performance, reliability and long service life.

Features

The standard spring return actuator on the rotating valve can provide spring-to-close or spring-to-open operation simply by changing the mounting position by 90°. double acting and spring return Series. Piston type actuators are designed for use in both modulating control and on-off service. designed to ISO 5211/1 when linkages are utilized. These actuators offer an extremely long cycle life and are well suited to operate almost any type of rotary valve.

Cylinder Body

Extruded anodized aluminum is selected for cylinder body , the best advantages of such material is very good mechanical properties and light weight at the same time , easy machining and honing main bore. Molded elastomer with fabric insert for strength, long life and high sensitivity.

Corrosion resistance

The epoxy painted actuators have housings of rugged cast iron, with light-weight aluminum cylinders anodized for added corrosion resistance. Travel stops are stainless steel.

Numbering System

Model Number	Actuator Type	Actuator Size
PQ	X	XX

“C” Increasing Air Pressure Rotates Counter Clockwise
“O” Increasing Air Pressure Rotates Clockwise
“D” Double Acting



Construction & Material Combination

ITEM	PART NAME	MATERIAL
1	SCREW	AISI 304
2	LOCK NUT	AISI 304
3	CAP	ASTM A105
4	SCREW	AISI 304
5	NUT	AISI 304
6	O-RING	VITON
7	SPRING RETAINER	ASTM A 216 GR. WCB
8	SPRING	INCONEL X-750
9	CYLINDER	ASTM A 105
10	STEM NUT	AISI 304
11	STEM NUT	AISI 304
12	SEAL RING	PTFE
13	PISTON	ASTM A 216 GR. WCB
14	PACKING SET	PTFE
15	HOUSING	ASTM A 216 GR. WCB
16	CRANK	ASTM A 105
17	OUT PUT SHAFT	ASTM A 105
18	POSITION INDICATOR	AISI 316
19	HOUSING COVER	AISI 316
20	SCREW	AISI 304
21	V-RING	VITON
22	SEAL RING	VITON
23	PACKING SET	PTFE
24	SEAL RING	VITON
25	SEAL RING	VITON

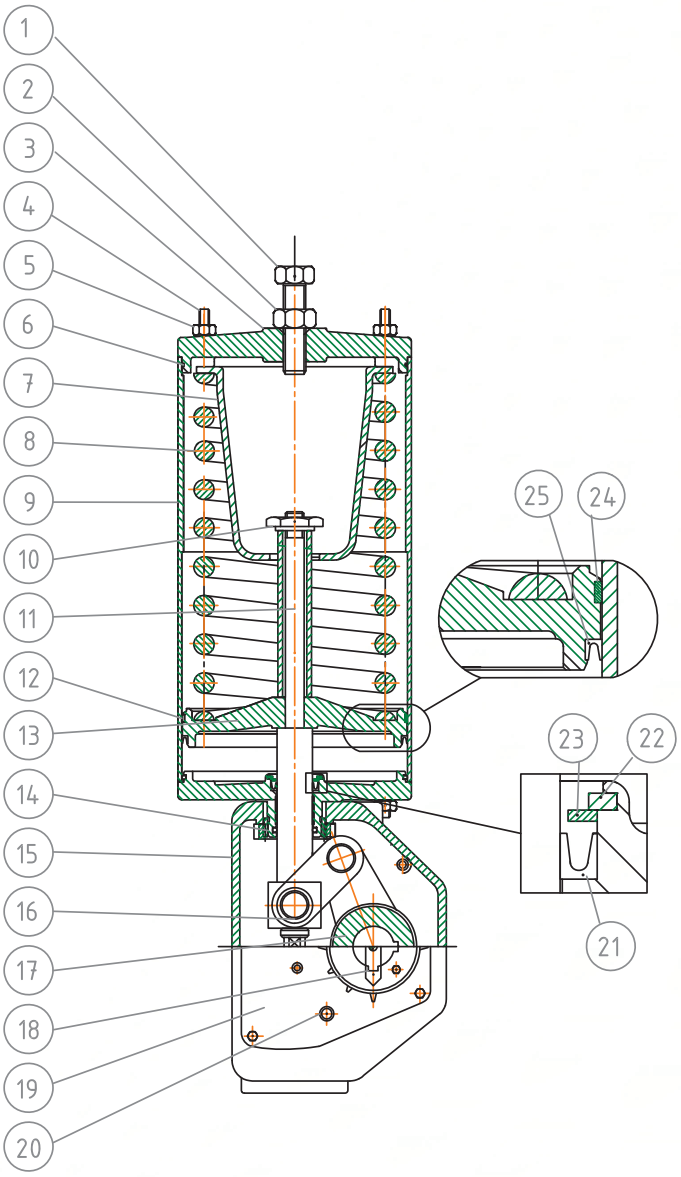

Specifications

SINGLE ACTING	SPRING TORQUE
ACTUATOR TYPE	NM
6	36
8	70
10	150
12	300
16	600
20	1200
25	2400
32	4800
40	8400

ACTUATOR TYPE	TORQUE OUTPUT @ SPECIFIC PRESSURE (NM)						
	3 BAR	3,5BAR	4BAR	5BAR	5,5BAR	6BAR	7BAR
6	45	51	60	75	82	90	100
9	85	100	115	145	160	175	205
11	160	185	220	270	300	330	375
13	330	390	460	565	620	675	790
17	620	720	850	1040	1160	1260	1570
20	750	880	1030	1290	1400	1550	1780
25	1450	1700	2010	2500	2700	3000	3450
32	2890	3400	4000	5000	5500	6000	7000
40	6100	7100	8290	10310	11300	12290	14300
50	11770	13900	16290	20210	22000	24190	28100
60	17330	20300	23710	29580	32400	35320	41190
75	27180	31700	37170	46250			
50X2	26540	31000	36290	44790	49600	54500	63000
60X2	38200	44600	52200	65110	71400	77710	90490
75X2	70300	82340	102710				

RP Series

RP series are pneumatic actuators with rack and pinion mechanism, opposed-piston actuator available in a double acting option for 90°, 135° and 180°rotations as well as a spring return option for 90° rotation. It is ideal for use on the BT Series in either automated on/off or throttling service.

Features

Integral Passages

Reduces cost of external tubing.

Piston Guides And Rings

Provides low friction coefficient and absorbs the side thrusts of the pistons extending the valve package service life.

Output Shaft Bearings

Low friction steel design provides extended service life in both on/off and throttling enviroments.

Output Shaft and pinion Gear

On piece manufactured from hardened steel and zinc-plated for corrosion protection.

Shaft Position Indicator

Show clear open/close position and easily removable for manual override.

Body

Extruded aluminum with anodized corrosion protective coating.

Travel Stop

Supports travel limits in both open and close directions.

End Caps

Polyester coated for added chemical resistance.

Piston

Die Cast aluminum.

Numbering System

Model Number	Actuator Type	Actuator Size
RP	X	XX

"S" Spring Return
"U" Double Acting
"U" Double Acting



Construction & Material Combination

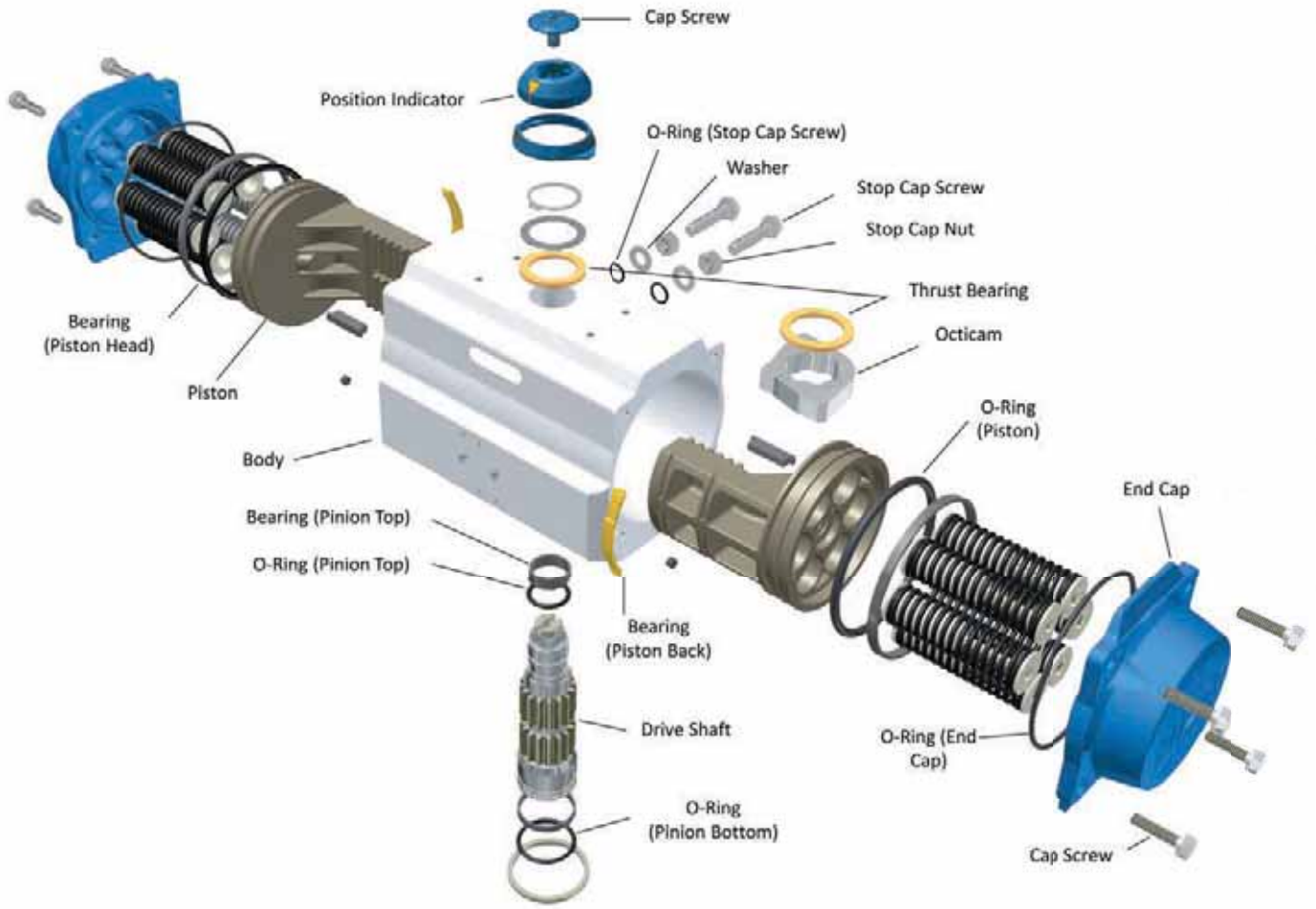

Specifications

Actuator Size	Actuator Volumes (cubic cm)		Output Torque (N.m)		Weight (Kg)	
	Double Acting	Spring Return	Minimum	Maximum	Double Acting	Spring Return
63	157	220	6.8	16.4	1.8	2.2
83	406	534	15.8	28.5	3.3	4.2
93	570	752	23.3	56	4.5	5.8
119	1209	1565	52	125	8.8	11.6
128	1585	2143	86	206	11.2	14.6
160	3073	4254	140	335	20.4	28.2
210	5899	7374	275	660	34.8	51.1
255	12290	14748	560	1342	77.2	103.2

MDS Series

MDS Series is Single Spring diaphragm pneumatic actuator designed to provide high performance with Maximum Precision for Microflow Control Valve .

Features

Robust Design

Main Body Design for absorbing Vibrstions

Diaphragm Cases

High mechanical strength and adequate protection in the event of severe over-pressurization.

Diaphragm

Molded elastomer with fabric insert for strength, long life and high sensitivity.

Linearity

The molded rolling diaphragm and deep cases minimize area changes providing a more linear relationship between travel, air pressure and output torque.

Field Reversible

Air action can be changed without additional parts.

Numbering System

Model Number	Actuator Type	Actuator Size
MDS	X	XX

"C"Fail to Close
"O" Fail to Open



Construction & Material Combination

Item	Part Name
1	Diaphragm Cover
2	Cover Cap Screw
3	Diaphragm
4	Spring
5	Diaphragm Plate
6	Limit Stop
7	Lock Nut
8	Lock Nut
9	Indicator
10	Yoke
11	Pivot Pin
12	Clip
13	Arm
14	Cover Plug
15	Adjusting Wheel
16	Internal Ad. Wheel
17	Adjusting Screw
18	Link
19	Pivot Pin
20	Clip
21	Cover
22	Pivot Pin
23	Clip
24	Spring Button
25	Conical Spring
26	Spring Plate
27	Stem
28	Nut
29	Main Body
30	Balancing Spring
31	Union Elbow
32	Tubing

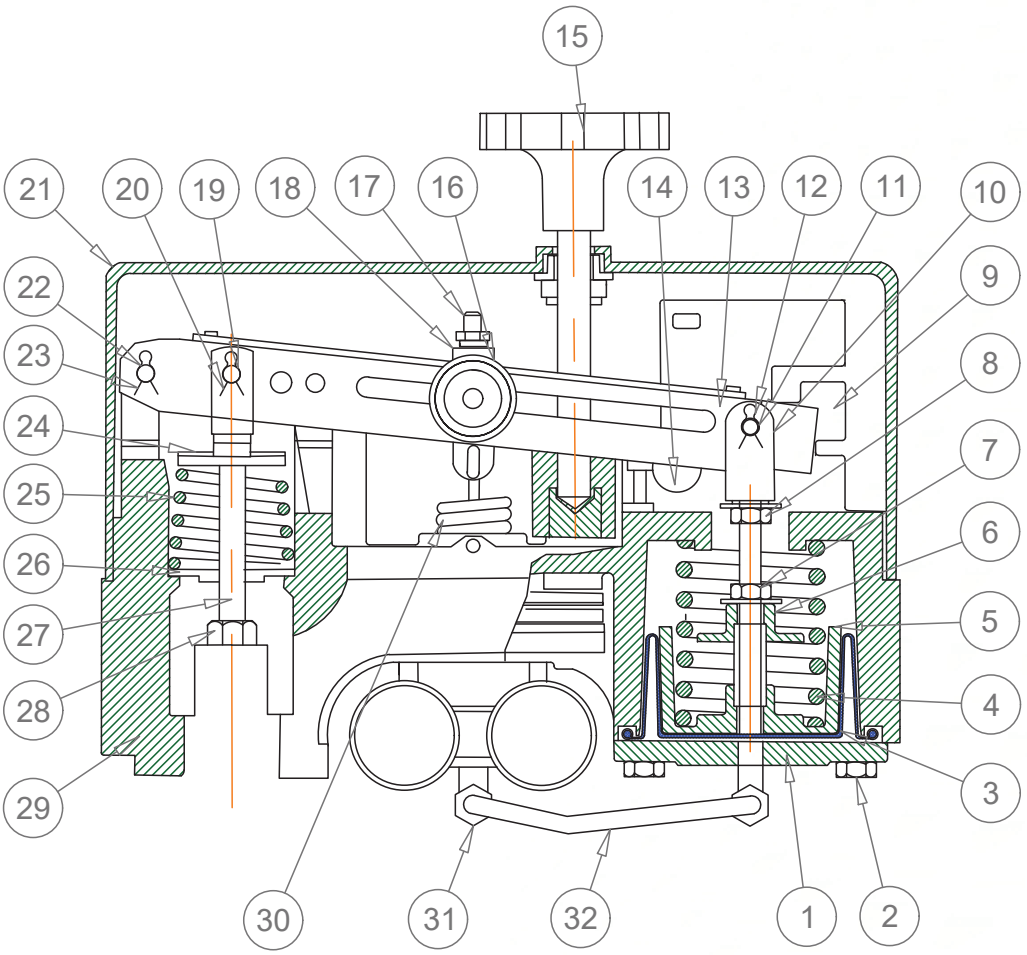



Specifications

SYP Penumatic Series

SYP series are pneumatic actuators with scotch yoke mechanism with Modular design , opposed-piston actuator available in a double acting option for 90°rotations as well as a spring return option for 90° rotation. It is ideal for use on the Butterfly , ball and other quarter turn valve Series in either automated on/off or throttling service as well as Modulating control valves.

Features

* Compact design offers a high torque to weight ratio
* Modular Design offers easy configuration in the field
* Module alignment ensured by precision machined centering rings
* Torque Output ranging from 2,744 to 885,100 Lb-in (310 to 100,000 Nm)
* Spring End Torque ranging from 2,744 to 445,261 Lb-in (310 to 50,306 Nm)
* Premium epoxy/polyurethane coating as standard

Numbering System

Series	Size Code									Base Number		
SYP	Actuator Size			Bore Size			Cylinder Size		Spring Size		Base Code	Action
SYP	F			1			L		4	–	ZED	C
	A	VF K1	X	Refer to Table Below			A	2.5”	0 None(DA)			A Double Act, Single Cyli.
	B	EZ K2					B	4”	1 Spring 1			B Double Act, Dual Cyli.
	C	EA K2					C	5”	2 Spring 2			C Spring Return, Fail CW
	D	VF K2					D	6”	3 Spring 3			D Spring Return, Fail CCW
	E	SD K2					E	7”	4 Spring 4			
	F	EV K3					F	8”	5 Spring 5			
	G	ZV K3					G	9”				
	H	VF K3					H	10”				
	J	EN K4					J	12”				
							K	14”				
							L	16”				
							M	18”				
							N	20”				
							P	22”				
							Q	24”				
							R	28”				
							S	32”				
							T	36”				

Actuator Bore Selection Table

Actuator Size	X		
	1	2	3
EZ K2	0.87” A/F		
EA K2	1.378”	0.87” A/F	
VF K2	1.969”	1.378”	
SD K2	2.5”	1.969”	
EV K3	3”	2.5”	
ZV K3	4.5”	4.0”	3.5”
VF K3	6.0”	5.0”	
EN K4	7.0”	6.0”	

Base Number						Trim Code					
Mounting/Yoke		Ports		Standard Options		Design Code		MOC		Temp Trim		Coating	
2		1		G		00		0		S		0	
1	ISO Symmetric	1	Single, NPT Standard	N	None	00	Std. Pneumatic	0	Standard (DI/CS)	S	Standard	0	Standard
2	ISO Canted	2	Dual, NPT	H	Hydraulic	01	PED	1	Stainless Steel	L	Low Temp	1	Primer Only
		3	Single, Custom	J	Jackscrew Direct Drive			2	Std with SS Bolt	H	High Temp		
		4	Dual, Custom	G	Jackscrew Gear Drive			XXX-Special Requirements					
				E	Extended Stopper 45°								
				F	Extended Stopper 90°								
				D	Damper - Hydraulic								
				P	PST & Locking Device								

Construction & Material Combination

ITEM	DESCRIPTION	MATERIAL
1	YOKE HOUSING	ASTM A 216 GR. WCB
2	GUIDE ROD	AISI 304
18	SEAL NUT	AISI 304
19	STOP BOLT	AISI 304
21	YOKE	ASTM A 216 GR. WCB
25	GUIDE BLOCK	ASTM A 105
26	BUSHING (GUIDE ROD)	AISI 316
31	ADAPTOR (PRESSURE MODULE)	ASTM A 216 GR. WCB
32	BARREL	ASTM A105
33	PISTON	ASTM A 216 GR. WCB
34	END CAP (PRESSURE MODULE)	ASTM A 216 GR. WCB
35	PISTON ROD	AISI 316
42	WEAR RING	AISI 316
43	QUAD SEAL	VITON
44	O-RING (BARREL)	VITON
46	PIPE PLUG	AISI 316
47	ADAPTOR (SPRING MODULE)	ASTM A 216 GR. WCB
48	PIPE	ASTM A 105
49	END CAP (SPRING MODULE)	ASTM A 216 GR. WCB
50	SPRING GUIDE	ASTM A 216 GR. WCB
51	BUTTON	AISI 316
52	SPRING	ALLOY STEEL
54	SPRING ROD	AISI 316
55	END COVER (SPRING MODULE)	ASTM A 216 GR. WCB
56	RETAINER RING (SPRING MODULE)	ASTM A 216 GR. WCB
63	O-RING (MODULE)	VITON
66	BREATHER VENT	AISI 316

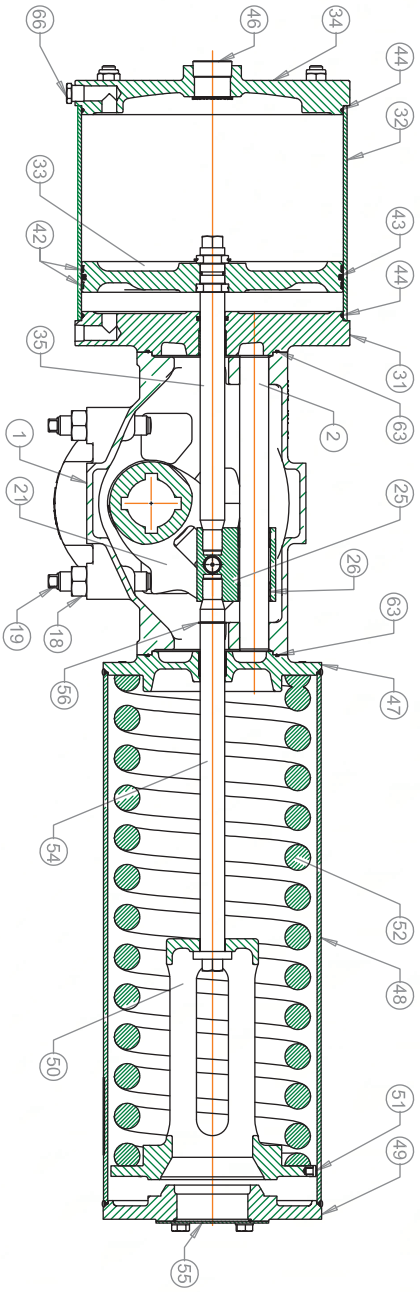

Specifications

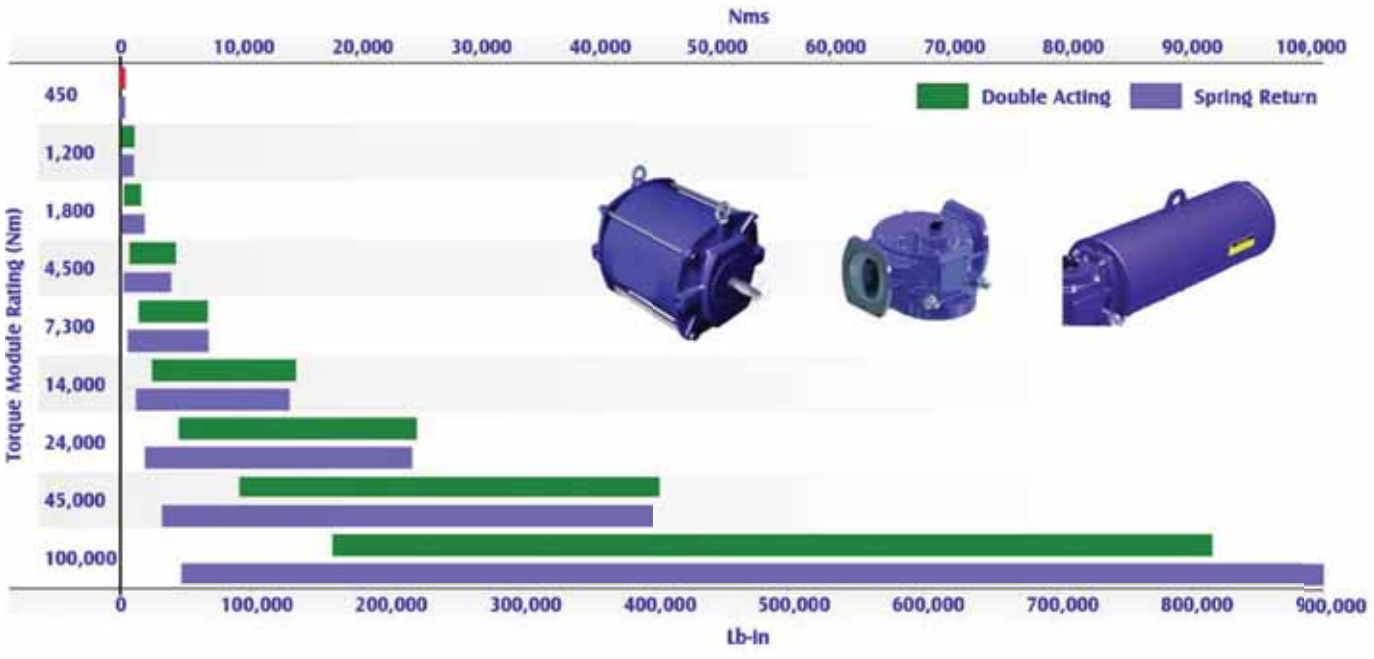

SYH Hydraulic Series

SYH series are hydraulic actuators with scotch yoke mechanism with Modular design , opposed-piston actuator available in a double acting option for 90°rotations as well as a spring return option for 90° rotation. It is ideal for use on the Butterfly , ball and other quarter turn valve Series in either automated on/off or throttling service as well as Modulating control valves.

Features

* Compact design offers a high torque to weight ratio
* Modular Design offers easy configuration in the field
* Module alignment ensured by precision machined centering rings
* Torque Output ranging from 2,744 to 885,100 Lb-in (310 to 100,000 Nm)
* Spring End Torque ranging from 2,744 to 445,261 Lb-in (310 to 50,306 Nm)
* Premium epoxy/polyurethane coating as standard

Numbering System

Series	Size Code									Base Number	
SYH	Actuator		Bore Size		Cylinder Size		Spring Size		–	Base	Action
SYH	F		1		F		4		–	ZED	C
	A		X	Refer to Table Below	A	32mm	0	None (DA)			A Double Acting, Single Cylinder
	B	EZ K2			B	40mm	1	Spring 1			B Double Acting, Dual Cylinder
	C	EA K2			C	50mm	2	Spring 2			C Spring Return, Fail CW
	D	VF K2			D	63mm	3	Spring 3			D Spring Return, Fail
	E	SD K2			E	80mm	4	Spring 4			
	F	EV K3			F	100mm	5	Spring 5			
	G	ZV K3			G	125mm					
	H	VF K3			H	140mm					
	J	EA K4			J	160mm					
					K	180mm					
					L	200mm					
					M	220mm					
					N	250mm					

Actuator Bore Selection Table

Actuator Size	X			
	1	2	3	4
EZ K2	1.181”			
EA K2	1.378”	1.181”		
VF K2	1.969”	1.378”	1.75”	
SD K2	2.5”	1.969”	2.362”	
EV K3	3”	2.5”	2.362”	
ZV K3	4.5”	4.0”	3.5”	3.149”
VF K3	6.0”	5.0”	4.724”	
EA K4	7.0”	6.0”		

Base Number								Trim Code				
Mounting/Yoke		Ports		Standard Options		Design Code		MOC		Temp Trim		Coating
2		1		G		00		0		S		0
1	ISO /	1	NPT	N	None	00	Standard	0	Standard (DI/ CS)	S	Standard	Srandard
2	ISO /	2	Custom	H	Hydraulic Override	01	PED			L	Low	
				K	Hand Pump Override							
				J	Jackscrew Direct drive			XXX-Special Requirements				
				G	Jackscrew Gear drive							
				E	Extended Stopper 45							
				F	Extended Stopper 90							
				D	Damper - Hydraulic							
				P	PST & Locking Device							

Construction & Material Combination

Item	Description	Material
1	Yoke Housing	Ductile Iron
2	Guide Rod	Alloy Steel
18	Seal Nut	Steel
19	Stop Bolt	Steel
25	Guide Block	Carbon Steel
26	Bushing (Guide Rod)	PTFE Bronze
31	Adaptor, Pressure Module	Carbon Steel
32	Barrel	Carbon Steel
33	Piston	Alloy Steel
34	End Cap, Pressure Module	Carbon Steel
35	Piston Rod	Alloy Steel
39	Tie Rod	Alloy Steel
40	Nut, Tie Rod	Steel
42	Guide Ring, Piston	Phenolic Resin
44	O-Ring (Barrel)	Buna-N
46	End Plug	Steel
47	Adaptor, Spring Module	Carbon Steel
48	Pipe	Carbon Steel
49	End Cap, Spring Module	Carbon Steel
50	Spring Guide	Carbon Steel
51	Button	Plastic
52	Spring, Compression	Alloy Steel
54	Spring Rod	Alloy Steel
55	End Cover	Carbon Steel
56	Retainer Ring	Stainless Steel
63	O-Ring (Module)	Buna-N
72	O-Ring	Buna-N
76	Plug	Plastic

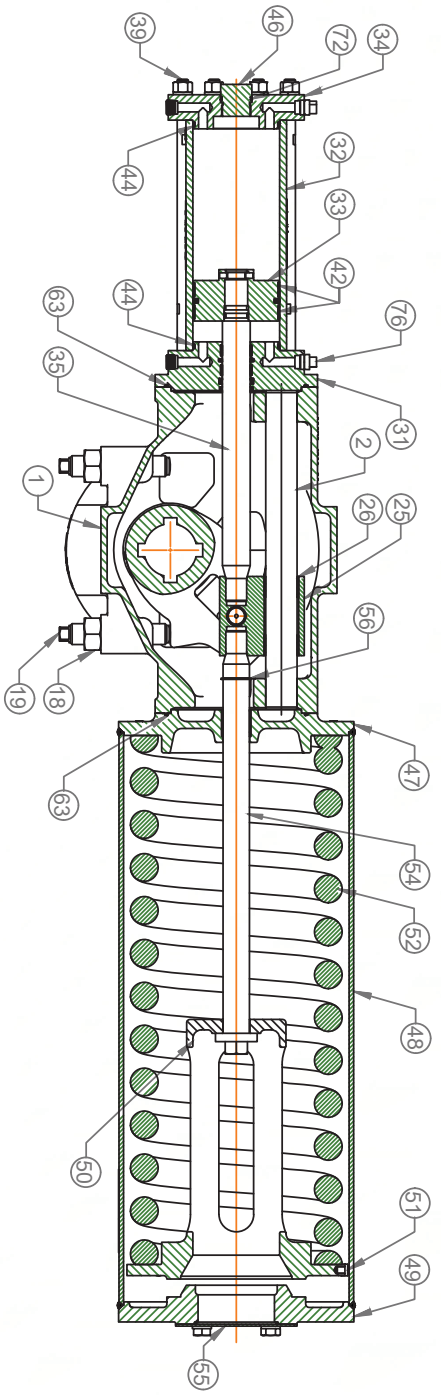

Specificatios

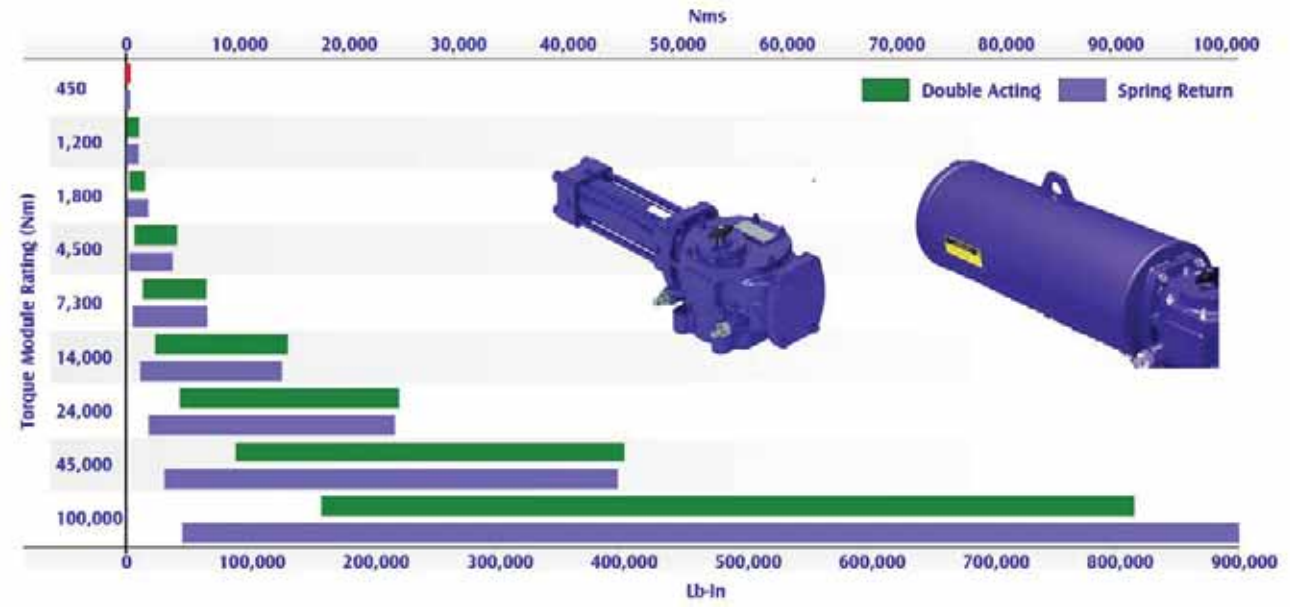

ELH Series

Self Contained Electro Hydraulic actuator generally all system components are mounted to the actuator assembly to form a compact solution for mounting directly on to the control valve.

These systems offer a solution for on-shore pipelines and applications where no hydraulic ring main is available. They require an electrical supply and a control command signal 4-20 mA.

Features

Modulating positional control

- Adjustable opening and closing speeds (also refer to stepping option)
- Fail position - Fail closed, Fail open or Fail last
- Fail position achieved by integral mechanical spring with installed load to provide fail condition on Loss of hydraulic supply
Loss of electrical supply
Loss of command signal

Available in double-acting control and single-acting spring to fail-safe control options with stepping action if required.

self-contained control assemblies comprise:

* Hydraulic actuator
* Spring module (for fail to position options)
* Hydraulic power unit
* Hydraulic control module
* Electronic positioner controller / motor starter enclosure
* Pressure control switching
* Hydraulic control switching
* Hydraulic storage accumulator for back-up operation
* Hydraulic hand pump for emergency operation

Hydraulic Actuators

* Type -Double-acting and single-acting
* Construction - Bolted style or tie rod
* Materials of Construction - End caps and tubes -carbon steel with protective plated or painted finish
* Piston Rod - Stainless steel with hard chrome
* Tie Rods -Stainless steel
* External Protective Finish - 2-pack epoxy paint system for severe off-shore environment in accordance with project specification

Hydraulic System Specifications:

* Hydraulic supply pressure range 50-350 bar.
* The actuator assembly includes the valve mounting yoke that is designed to suit individual valve manufacturers standard interface top works.

Electronic Positioners

Generally these are mounted on the actuator assembly requiring a 24 V DC power supply and provide positioning control by a 4-20 mA command signal and providing a 4-20 mA re-transmitted output signal.

Universal Controller

For installation in zone 1 or 2 hazardous areas.
This unit is housed within an Exd enclosure available in 316 stainless steel or coated aluminum and closed coupled to an Exe 316 stainless steel enclosure to facilitate interconnection wiring components on site installation wiring.

Universal Controller incorporates an LED graphic display with local control setting switch.

* Manual mode for actuator test
* Stepping mode selection
* Fail safe mode selection on loss of power or signal
* HART protocol data on command or retransmitted actual signal
* Positional accuracy of control valve from 0.25% with a resolution of 0.1% from the 4-20 mA externally powered command signal
* Configuration by Bluetooth communication including response tuning, valve position calibration, valve position feedback setting, fault viewing and pump control

Numbering System

EHPC210 P 80-36-50 DA FSP SC LS3 MO XXX

ELECTRONIC POSITIONER
EHPC210 = Universal positioner controller
EX200 = Compact positioner controller Exd
IS200 = Compact positioner controller Exia

POSITIONING MODE
P = Positioning
M = Modulating
S = Stepping

ACTUATOR CYLINDER SIZE
xxx - xxx - xxx = Bore x rod x stroke
(Specify size according to thrust and pressure)

ACTUATOR OPERATION
DA = Double-acting
SA = Single-acting

FAIL ACTION
FSP = Fail stayput
SFC = Spring fail close
SFO = Spring fail open

ACTUATOR SYSTEM TYPE
RM = Ring main system
SC = Self contained system

SPECIAL REQUIREMENTS
LS1 = Limit switch open
LS2 = Limit switch close
LS3 = Limit switch open and close
MO = Manual override (hand pump)
SMAR = Independent position transmitter
XXX = Other special features



Gas Over Oil GOV Series

pipeline actuators is designed to use pipeline gas as the motive power source. The gas is delivered to oil tanks that convert the gas into hydraulic pressure.

This pressurized hydraulic oil is used to drive our industry recognized and proven scotch yoke quarter-turn or linear actuators. Using pressurized oil as the driving fluid provides powerful and smooth actuator control and isolates the cylinder from pipeline gas. This prevents contaminants from entering the hydraulic cylinder, eliminating corrosion and seal deterioration, and extending actuator life.

Standard Features:

- Scotch yoke quarter-turn actuators with either symmetric or canted yoke designs for optimum sizing of actuator to valve.
- Actuators are IP66M/67M third-party certified and approved for environmental protection.
- Chromium-plated piston rod and electroless nickel-plated cylinder to provide enhanced durability of critical sealing surfaces.
- Working pressure 10 to 105 barg (145 to 1,500 psig) –higher on application.
- Manual hand pump for emergency or local operation.
- Controls designed to operate at full pipeline pressure, eliminating possible pressure regulator failure.
- Modular and compact integrated manifold design reduces fittings and potential leakage.
- Local control via lever-operated poppet valves on the multi-function manifold.
- Standard GOV tanks are designed, manufactured and tested according to ASME VIII Div. 1.
- Stainless steel pressure gauge to measure gas supply pressure with psi / bar scale.
- Particulate filter with a stainless steel element is included as standard. The element is easily removable and cleanable.
- Stroke time is adjusted via two hydraulic flow control valves providing smooth and precise speed control.

Optional Features:

- Pressure sensing valves with optional manual reset to monitor pipeline pressure.
- Pressure differential valves with optional manual reset to monitor the differential across the valve.
- Linebreak detection safety systems sensing pipeline pressure drop over time.
- ESD (emergency shutdown) control configurations to suit specific customer shutdown logic requirements.
- Actuator torque limiting devices for the protection of the valve or drive train.
- Custom gas filtration.
- Lockable control cabinet in painted carbon steel, or optional stainless steel.



GOV ROTARY SPLINE COMPACT SIZE

GSSE designed a compact series of gas over oil actuator for small valve size from 2 inch to 8 inch , this special design utilizing a rotary spline sear configuration to convert the gas pipeline pressure to hydraulic pressure for moving the valve stem in desired position. Torque range of this type is from 100 NM to 800 NM

Applications:

Transmission
Meter runs
Blowdown Valves
Compressor Stations
Storage
LDC's
Gathering Gas Plants

Features:

No power gas regulators and relief valves required
Zero Leakage Piston
Typical Size range: Small Valves from 2 inch to 8 inch
Straight Line Torque Range: From 2,250 in-lbs to 18,000 in-lbs
Typical Pressure Ranges: From 400 psig to 1,500 psig
Temperature Range: -20°F to +120°F
Small Envelope
No Valve Stem Side Loading
No Internal Corrosion Problems
Gas Hydraulic Tanks prevent gas contaminants from entering the actuator Vastly Extended Seal Life

FRAME SIZE:

This series will be supplied in A, B & C size series

GOV SCOTCH YOKE SERIES Large Size:

This series is a high performance product which provide 500 NM to 750,000 NM torque to cover all pipeline valve requirement.

Operating Pressure :
12 bar to 150 bar
Temperature Range :
- 60 °C to + 80°C
Standard Equipment:
Local control
Remote control
Optional Features:

- Low Pressure ESD
- High Pressure ESD
- Differential Pressure
* Line Break
* Solar Energy System Available upon request

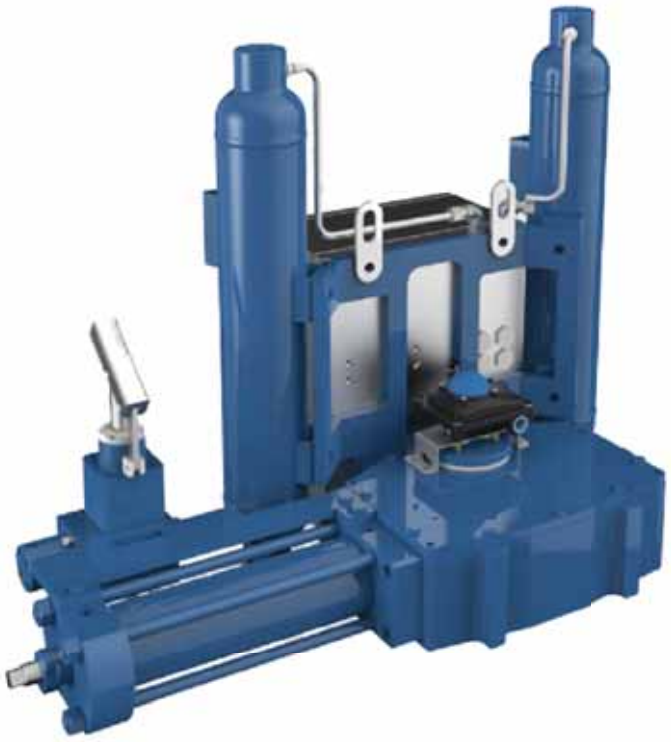

Rotary Vane Valve Actuators

The rotary vane is a hydraulic powered actuator. Hydraulic force simultaneously forces both of the rotor's vanes away from the stationary shoes producing rotation and perfectly balanced torque output. Hydraulic input power is reversed for rotation in the opposite direction. There is no conversion of linear to rotary motion, so this highly efficient actuator design produces perfectly balanced torque.

Applications:

GSSE rotary vane actuators are used to automate ball valves or plug valves in all types of severe climatic conditions.

- Full open/close operation of ball valves and plug valves
- Automation of valves on natural gas pipelines where the actuators are typically powered by natural gas using gas-over-oil technology
- Emergency Shut Down
- Mainline isolation
- Linebreak protection
- Station blow down
- Remote valve control
- Hi/low pressure shutoff
- The rotary vane's compact size and concentric weight distribution make it ideal for high vibration applications
- Slurry pipelines
- Pump and compressor stations
- Valve automation for crude oil or refined products pipelines with precise control of the stroking speed

Capabilities:

- Torque output range:
  1,000 lbf-in to 17.8 million lbf-in
  (113 N.m to 2.0 million N.m)

- Power supply pressure range:
  200 psi to 3,000 psi (13.8 bar to 206.8 bar)
  Hydraulic or gas over oil power source or
Self contained Electro Hydraulic system

- Ambient temperature range:
  -20°F to 250°F (-29°C to 121°C) Standard
  -50°F to 250°F (-46°C to 121°C) Optional
-76°F to 250°F (-60°C to 121°C) Consult Factory

Torque Specifications:

Torque output of the rotary vane actuator remains constant throughout the full rotation of the valve. This ensures that your specified safety factor will not be jeopardized at different positions during the valve stroke. Constant torque output is an especially important feature in the following applications:

- Potentially high flow applications like blow down and line break
- Plug valves or metal to metal seated valves
- Ball valves with rotating seats

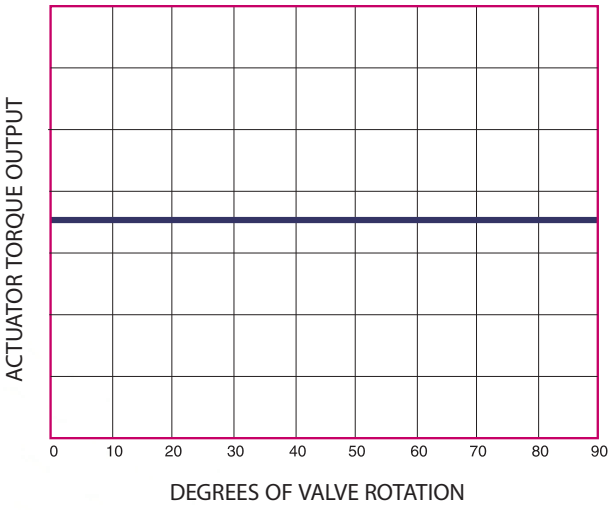

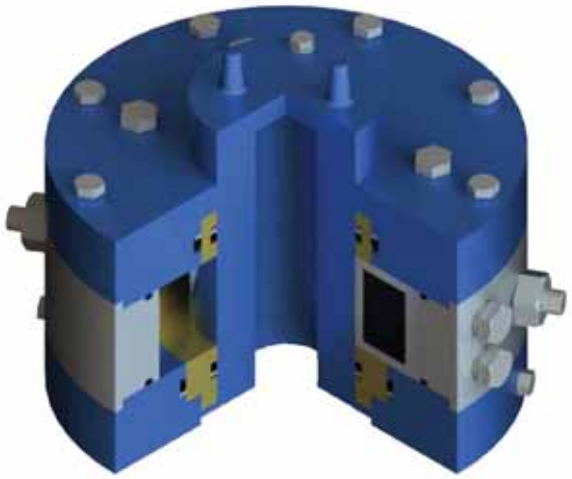

Operating Sequence

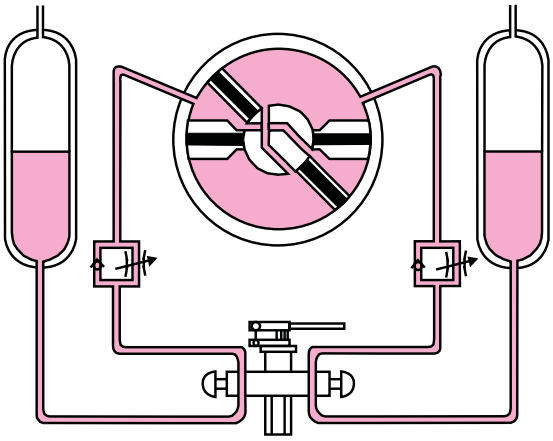

SEQUENCE 1

The actuator may be powered by a hydraulic power unit, stored gas pressure or by natural gas pressure from a pipeline. In this illustration, the actuator is fitted with gas hydraulic tanks and is powered by gas pressure. In the first sequence, the actuator is in the open position. There is no pressure in the actuator or tanks.

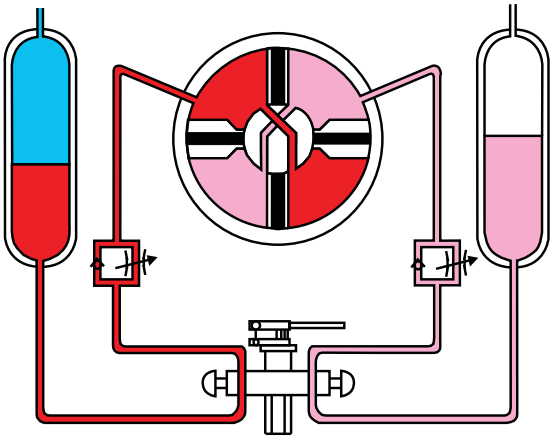

SEQUENCE 2

The actuator control system is used to admit high pressure gas into the closing gas hydraulic tank. The pressurized gas in the tank forces hydraulic fluid into the actuators closing port. Pressure equalizing passages allow both closing quadrants to be pressurized simultaneously providing balanced torque as the vanes push away from the stationary shoes. The actuator is rotating clockwise.

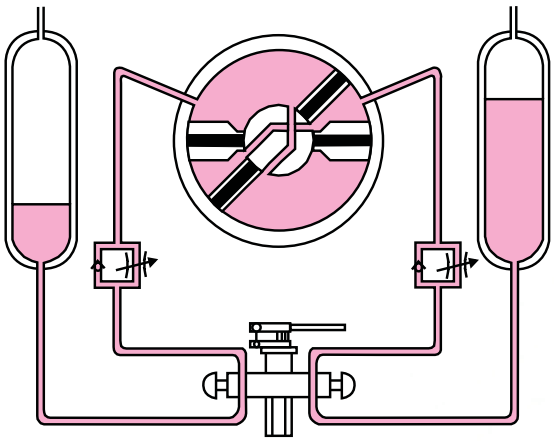

SEQUENCE 3

When the actuator reaches the fully closed position, the control system will allow all remaining pressure in the tank to vent to atmosphere, thus neutralizing the pressure in the tank and actuator.

High Pressure Gas
Pressurized Hydraulic Fluid
Non-Pressurized Hydraulic Fluid

Controls and Accessories

GSSE builds and tests the complete valve operating system, including the actuator, controls and accessories.

Typical Control Syestem

- Local manual
- Remote two-way electric
- Linebreak Protection sensing rate of pressure drop
- Emergency Shutdown (ESD) or fail-safe
- High/low pressure shutoff

Common Accessories

- Manual hydraulic hand pump
- Control valves –hydraulic and pneumatic
- Sensors for automatic operation
- Power storage vessels
- Power supply units
- Limit switches and position transmitters
- Speed controls
- Regulators

Rotary Vane Valve Actuators Technical Specifications

Frame Size	Max Torque	Max Working Pressure	Min Working Pressure	Max Test Pressure	Oil Displacment / 90° Storke	Max Stem Dia	Gas Consumption @69 Bar	Weight
	NM/BAR	BAR	BAR	BAR	Litere	Cm	M3	Kg
S 1/2 x 2	18.84	103	6.9	207	0.34	6.66	0.2	43
S 1/2 x 3 1/2	32.8	99.3	6.9	206	0.6	6.67	0.2	70
S 1/2 x 8	77.56	99.3	6.9	206	1.34	6.67	0.2	120
N x 7	118	99.3	6.9	206	2.05	9.53	0.4	199
N x 12	210.7	99.3	6.9	206	3.7	9.53	0.6	297
EZ 1/2 x 8	306	99.3	6.9	199	5.3	11.43	0.9	404
EZ 1/2 x 12	472.2	99.3	6.9	199	8	11.43	1.4	562
EF 1/2 x 16	855	99.3	6.9	199	14.9	13.97	2.5	916
ES 1/2 x 16	1129	99.3	6.9	148	21	15.24	3.6	1102
ZN x 16	1883	99.3	6.9	155	32.9	15.24	5.7	1747
ZF x 16	3038	99.3	6.9	148	52.9	16.51	9.1	3100
ZS x 22	4413	99.3	6.9	148	76	18.73	13.3	4217
ZS x 36	7113	68	6.9	137	126	18.73	21.7	6971
DD x 32	9622	68	6.9	103	178	24.13	29	8851

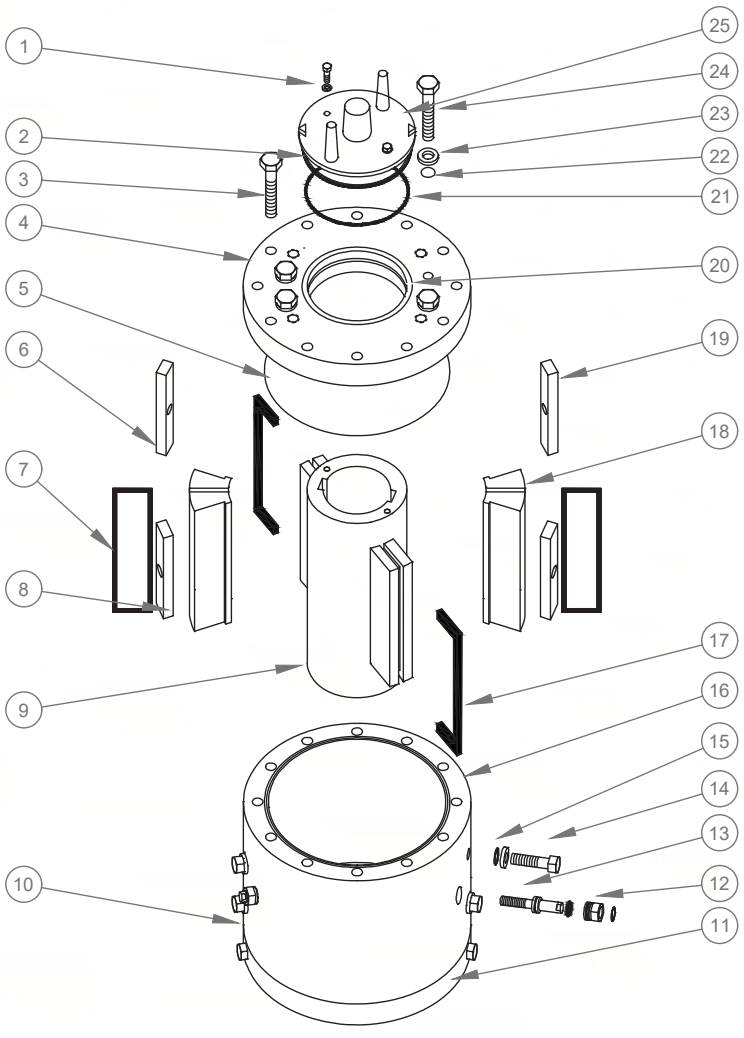





Item	Description
1	Mounting Screw
2	Packing
3	Head Bolt
4	Actuator Head
5	Head Seal
6	Adjustable Stop Bar
7	Shoe Seal
8	Adjustable Stop Bar
9	Rotor Assembly
10	Drain Pipe Plug
11	Lower Head
12	Lock Nut
13	Stop Adjustment Screw
14	Shoe Bolt
15	Seal Retainer
16	O-Ring
17	Actuator Body
18	Shoe
19	Adjustable Stop Bar
20	Broze Bushing
21	Rotor Seal
22	O-Ring
23	Seal Retainer
24	Shoe Bolt
25	Position Indicator

- The most compact actuator available
- The double vane design will not generate any side loading forces on the valve stem or actuator bearings
- Constant torque output over the full 90° rotation
- Vibration resistant with the actuator body centered directly over the valve stem and weight equally distributed over the valve flange
- Maximum rated pressure and maximum operating pressure are equal
- Valve response is always smooth and always dependable



Motorized Actuator

The multi-turn electric actuator is an actuator with an output angle greater than 360°. EGA-L Series is suitable for valves with multi-turn stroke for linear travel, such as gate valves, globe valves, regulating valves and others. EGA-R Series can be paired with 90° gearbox to achieve quarter turn travel for valves such as butterfly valves, ball valves, plug valves and others.

Classifying By Motion Mode of Driven Part:

EGA-L Multi-Turn (Linear) / EGA-RQ Part-Turn Rotary

Classifying By Actuator Working Condition:

Outdoor Type / Explosion-Proof Type

Classifying By Actuator Control Performance:

Basic Type(Mechanical Type) /
Mechatronic Type (Integral Model/Intelligent Model)

Classifying By Actuator Control Mode:

On-Off Model /Modulating Model



Ordering System

	1	2	3	4	5	6	7

1 Product Design Series

2 Driving Mode

- R Multi-Turn
- RQ Superimposed Part-Turn

3 Applicable Ambient

- A Outdoor Ambient (No Indication)
- X Explosion-Proof Type
- I Explosion-Proof And Intrinsic Safety Type

4 Rated Torque: display in digits (Unit: kgf.m)
Or Thrust: display in digits (Unit: N)

5 Rated Rotate Speed: Display in digits (Unit: RPM)

6 Control Mode

Basic Type No Letter Indication

- IO Integral On-Off Type
- IM Integral Modulating Type
- LO Intelligent On-Off Type
- LM Intelligent Modulating Type



Features

Manual/Electric Operation
USER Interface LCD Display
Highly Integrated Control Circuit
Intelligent Backup Power System
Bus Control Function
Superior Anti-Interference Capability
Infrared Remote Control Function
Superior Anti-Interference Capability
Advanced System Software
Reliable And Comprehensive Data Recording
Precise Torque Measurement And Protection
Precise Valve Position Stroke Measurement And Protection
Electric Motor Detection and Protection
Instantaneous Inversion Protection
Electronic Brake
Control Mode Protection
Passive Monitoring Function
Intelligent Network Security Protection(Optional)
Power Detection and Protection
Over Voltage And Under Voltage Protection
Overload And Short Circuit
Intelligent Self-Detection And Diagnosis
Spring Return Fail Safe (Optional)

Power Supply

380V AC±10% / 50Hz±5%
220V AC±10% / 50Hz±5%

Input Signal

A) Analog Quantity: 4mA~20mA DC, input impedance 250Ω
B) On/Off volume active 24V DC
C) Profbus-DP Or MODBUS(Optional)

Output Signal

A) 4mA~20mA DC, load impedance≤750Ω
B) Six groups of passive contacts
C) PROFIBUS Or MODBUS(Optional)

Applications

Oil & Gas	**Explosion Proof Ex (dI/dII) IP 65**
Power Plants	**All Weathers IP 65**
Offshore & Marine	**All Weathers, Corrosion Proof**

GSSE TYPES OF CONTROL VALVES


Multi Stage


Dual Port


Cage Guided


Top Guided


Rotary Globe


RG Trim


Segment Ball


Segment Trim


Cage Ball


Cage Ball Trim


3 Way Butterfly


Butterfly Trim


Micro-Flow

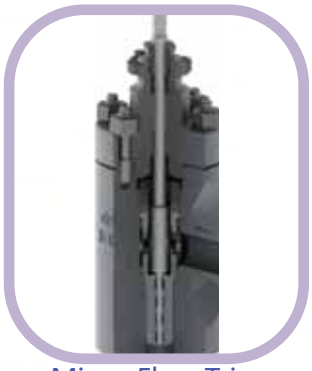
Micro-Flow Trim


Steam Condition


SF Trim


Anti-Surge


Stack Trim


Heavy Oil


Tank Drain

GSSE SERIES	SIZE		PRESSURE RATING		END CONNECTION			TEMPERATURE RATING		DESIGN	SERVICE		Cv RANGE	Remarks	Application
	In		Lbs		FLG	RTJ	BW	°C			GENERAL	SEVERE			
TG	1/2	8	150	2500	*	*	*	-29	427	TOP GUIDED	*		0.1-640		All Purpose
CG	2	24	150	2500	*	*	*	-196	566	CAGE GUIDED	*	*	16-8000		All Purpose
LG	1	8	300	2500	*	*	*	-29	316	AXIAL FLOW	*	*	1-141.5	1	Min flow-Max DP
MF	1/2	1	150	2500	*	*	*	-196	343	AXIAL FLOW	*		0.0016-3.8		Mirco flow
DP	2	12	150	1500	*	*	*	-29	427	STEM GUIDED	*		8-2560		High Cv
RG	1	12	150	600	*	*	*	-196	400	ECCENTRIC PLUG	*	*	0.5-1750	3	Densed fluid
SB	1	12	150	300	*	*	*	-29	316	SEGMENTED BALL	*	*	55-4400		Densed fluid
NABA	2	56	150	2500	*	*	*	-60	176	MULTI STAGE BALL	*	*	260-249000		Super High Cv
BF T	2	48	150	1500				-196	427	TRIPLE OFFSET	*	*	10-74210		High Temp. High Pre
BF D	2	64	150	600	*	*	*	-10	200	DOUBLE OFFSET	*	*			High Performance
SF	1	48	150	4500	*	*	*		648	CAGE GUIDED		*	5800		Desuperheater
HPL	1	8	600	4500	*	*	*	-29	565	AXIAL FLOW		*	15-200	1, 2	Min flow-Max DP
HOV	1	12	600	2500	*	*	*	-29	480	STEM GUIDED		*	7-530		High Cv
LMF	4	30	150	2500	*	*	*	-196	594	STACK TRIM		*	110-13500	1	Anti Surge
TD	1	16	150	1500	*	*		-29	360	STEM GUIDED		*	3.5-2500		Tankk Drain
VL	3	30	150	2500	*	*	*	-30	566	VARIABLE STACK					Anti Surge
BLOW DOWN	1	3	300	2500	*	*	*			STELLITE TRIM					Boiler
ARC VALVE	1.5	12	150	2500	*	*	*								Boiler

1 AVAILABLE FOR API 2000-10000

2 AVAILABLE WITH HUB CONNECTION

3 AVAILABLE WITH FLANGELESS BODY

INNOVATIVE FLUID MANAGEMENT TECHNOLOGY

GSSE TYPES OF PRESSURE REGULATOR AND BACK PRESSURE VALVES


MN5R


TZ05


Z30


ME05R

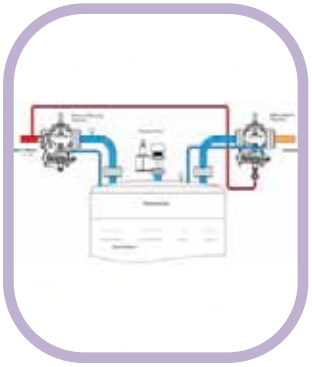
BLANKETING


ZN98-TGC


EZH


T5L


N2B


N2S


DE0A


Z27


67CFR


ZD-EG


ZD-EG


ZD-EG-98H


DC


N9


YZ93


ZF90

PRESSURE REGULATOR VALVES

Outlet Pressure Range psig / barg	Air	Steam	Tank Blanketing	Liquid	Process Gas	Fuel Gas	Model	Operation Method	Body Size, NPS	MAXIMUM INLET PRESSURE, psig / barg
2 to 400 / 0.14 to 27.6	•	•		•	•	•	MN5R	Direct	¼ to 2	1000 / 68.9
1in. w.c. to 7 / 2 mbar to 0.48	•		•		•	•	TZ05	Direct	¾ and 1	200 / 13.8
3 to 500 psig / 0.21 to 34.5 bar	•				•	•	Z30	Direct	1 and 2	1500 / 103
5 to 300 / 0.34 to 20.7	•			•	•	•	ME05R	Direct	1, 2, 3 and 4	400 / 27.6
0.25 in. wc to 7 / 0.6 mbar to 0.48	•		•		•		EF90	Pilot	1 to 12	400 / 27.6
4 in. w.c. to 300 / 10 mbar to 20.7	•		•	•	•	•	ZN98-TGC	Pilot	1 to 12	400 / 27.6
14.5 to 1160 / 1 to 80	•				•	•	E2H	Pilot	1,2,3,4,6,8 and 12x6	1,500 / 103
0.5 in wc to 7 psig/1mbar to 0.48	•				•	•	T5L	Pilot	1, 2, 3, 4, 6, 8 and 10	1480 / 102
2 to 250 / 0.14 to 17.2		•					N2B	Pilot	1, 1-1/2, 2, 3 and 4	42,400 lbs/h /19,234 kg/h
2 to 250 / 0.14 to 17.2		•					N2S	Pilot	1" to 6 x 4	300 / 20.7
10 to 700 / 0.69 to 48.3	•				•	•	DE0A	Pilot	1" to 4X6	1500 / 103
0 to 150 / 0 to 10.3	•				•	•	S7D	Direct	1/2	20,900 / 560
2 in. w.c. to 100 / 5 mbar to 6.9	•		•		•	•	N9	Pilot	2	1000 / 69.0

BACK PRESSURE REGULATOR AND RELIEF VALVES

Control Pressure Range psig / barg	Air	Steam	Tank Blanketing	Liquid	Process Gas	Fuel Gas	Model	Operation Method	Body Size, NPS	MAXIMUM INLET PRESSURE, psig / barg
2 to 375 / 0.14 to 25.9	•	•		•	•	•	MN8R	Direct	¼ to 2	400 / 27.6
2in. w.c. to 7 / 5 mbar to 0.48	•		•		•		TZ08	Direct	¾ and 1	75 / 5.2
3 to 250 / 0.21 to 17.2	•				•	•	Z30R	Direct	1 and 2	550 / 37.9
5 to 300 / 0.34 to 20.7	•			•	•	•	ME08R	Direct	1, 2, 3 and 4	400 / 27.6
0.5 in. w.c. to 7 / 1 mbar to 0.48	•		•		•		ZF90	Pilot	1 to 12	12.5 / 0.86
0.5 in. w.c. to 7 / 1 mbar to 0.48	•				•	•	ZN98-TGC-Z3EG	Pilot	1 to 6 and 8 x 6	8,795,000 /235,706
14.5 to 1160 / 1.0 to 80.0	•				•	•	E2HR	Pilot	1 to 4	13,833,000 /370,724

GSSE TYPES OF PRESSURE RELIEF, SAFETY AND PRESSURE VACUUM VALVE


EN 00


EN 00P


EN 00UM

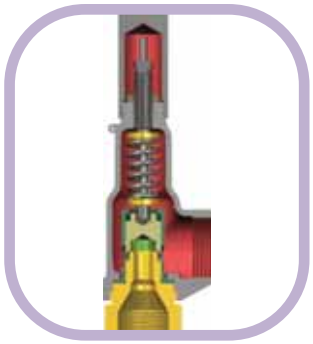
EN 000


EN 82

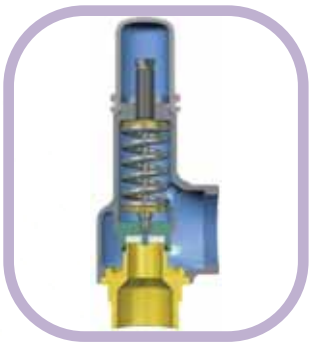
ZV 87


ZN 00


DN 00


VN 00


EDN 00

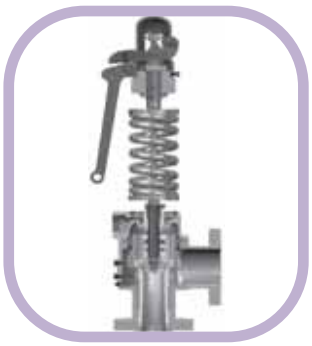
ES 00

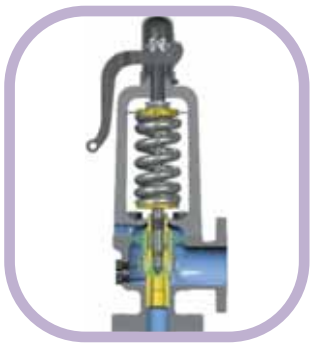
ZS 00


EA 11


EF 11


EF 41


ZN 00-40


DF 00D


VN 20


VN 10


VN 20A

GSSE MODLE SERIES	CONSTRUCTION			INLET SIZE		INLET RATING		OUTLET SIZE		OUTLET RATING		ORIFICE SIZES		SET PRESSURE RANGE		TEMPERATURE RANGE		ASME SEC I	ASME SECVIII
	CONVENTIONAL	BELLOWS	PILOT	In		Psi		In		Psi				Psi		°C			
EN00	□	□		1	12	150	2500	2	16	150	300	D	W	4	6250	-268	815	*	*
EN00-UM	□	□		1	12	150	2500	2	16	150	300	D	W	4	6250	-268	815	*	*
EN000	□	□		0.5	2	150	2500			150	300	0.096	0.567	5	8000	-254	593		*
EN82				0.2	2	THREADED		THREADED		THREADED		0.121	1.399	10	500	-29	427		*
ZV82				0.5	2.5	THREADED		THREADED		THREADED		D	J	15	300	-198	208		
ZN00				1	12	150	2500	2	16	150	300	D	W	15	6250	-40	263		*
DN00			□	1	12	150	2500	2	16	150	300	D	T	15	6250	-40	263		*
VN00			□	1	8	150	2500	2	10	150	300	D	T	15	7200	-40	263		*
ED900	□		□	16	20	300		18	24			114	201	50	300	121	288		*
EZ00			□	1.5	8	600	4500	3	10	150	300	-1	Q	100	1600		565	*	*
ZS00				1.5	6	600	1500	3	8	150	300	-1	Q	100	1600		565	*	*
EA11				1.25	6	300	600	1.5	8	150	300	-F	Q	15	725		538	*	*
EF11				1.5	6	250		2.5	4	125		-H	Q	15	250	-29	215	*	*
EF41-3				0.5	2.5	THREADED		0.75	2.5	THREADED		D	J	15	350	-29	215	*	*
EN00/P				1	8	150	2500	2	10	150	300	D	T	5	6000	-29	454	*	*
ZN00-40			□	1	12	150	2500	2	16	150	300	D	W	15	5800	-40	263		
DF00-5				1.5	4	150	4500	3	6	300	900	0.875	3	50	6000		621		

PRESSURE VACUUM RELIEF VALVE PVRV

MODLE	CONSTRUCTION			PRESSURE SETTING		VACUUM SETTING	
	WEIGHT	SPRING	PILOT				
VN20	*	*		100 mbarg	1 barg	-100 mbarg	-1 barg
VN20-A			*	100 mbarg	1 barg	-100 mbarg	-1 barg
VN10	*	*		100 mbarg	4 barg	-100 mbarg	-4 barg

INNOVATIVE FLUID MANAGEMENT TECHNOLOGY

GSSE TYPES OF ACTUATORS AND INSTRUMENTS



DM



PSR

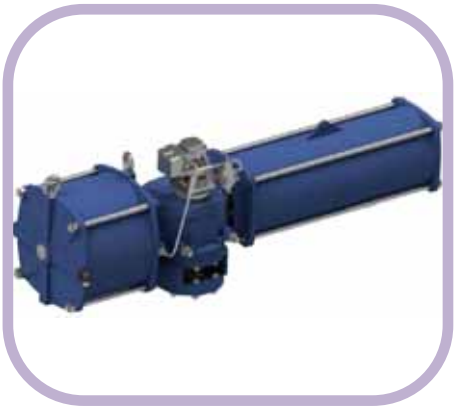

SYP



RPS



PD-2



QT

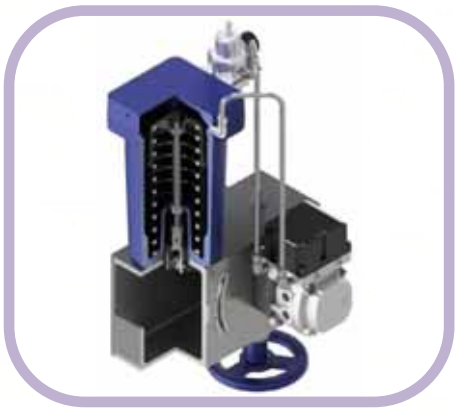

RD



EGA



ELH



P to P Positioner



Hart Positioner



Volume Booster

GSSE SERIES	DESIGN		FRAME SIZE	MAX. OPERATING PRESSURE	TRAVEL RANGE	OPERATING ENERGY		
	LINEAR	ROTARY		PSI		PENUMATIC	HYDRAULIC	ELECTRIC
DM	*		6, 10, 16, 23	60	0.8-2.5 INCH	*		
PS	*		6, 8, 12, 16, 20	150	2.5-12 INCH	*		
PSH	*		1	3000	12 INCH		*	
ELH-L	*		1 1	2250	20 INCH			*
ELH-Q		*	1	2250	90 DEG			*
QT		*	8, 10, 18	60	90 DEG	*		
RD		*	41/2, 6, 7, 9	60	90 DEG	*		
RP		*	8 SIZES	100	90 DEG	*		
PQ		*	9 SIZES	100	90 DEG	*		
SY		*	9 SIZES	100	90 DEG	*		
SYH		*	9 SIZES	1500	90 DEG		*	
EGA	*	*	11 SIZES		MULTI TURN			*

VS 00 P to P fully stainless steel positioner suitable for direct sour gas application

Digital Smart Hart and Foundation Field Bus Electero Punematic Positioner

Voulme Booster for fast Stroking Applications

High and Low Cv Air set for different Applications

INNOVATIVE FLUID MANAGEMENT TECHNOLOGY

Applicable International Standards (Design and Material)

API (6A, 6D, 600, 602, 599)
ASME (B16.34, B16.5, B16.10, 16.25, 16.47)
IPS (E-IN-160, C-IN-160, G-IN-160 , M-IN-160)
BS (1873, 5353, 12516, 2080, 5351, 1414, 1868)
NACE (MR0175)
ATEX
PED
Other Material and Special Design Applicable On Request.

Certificates

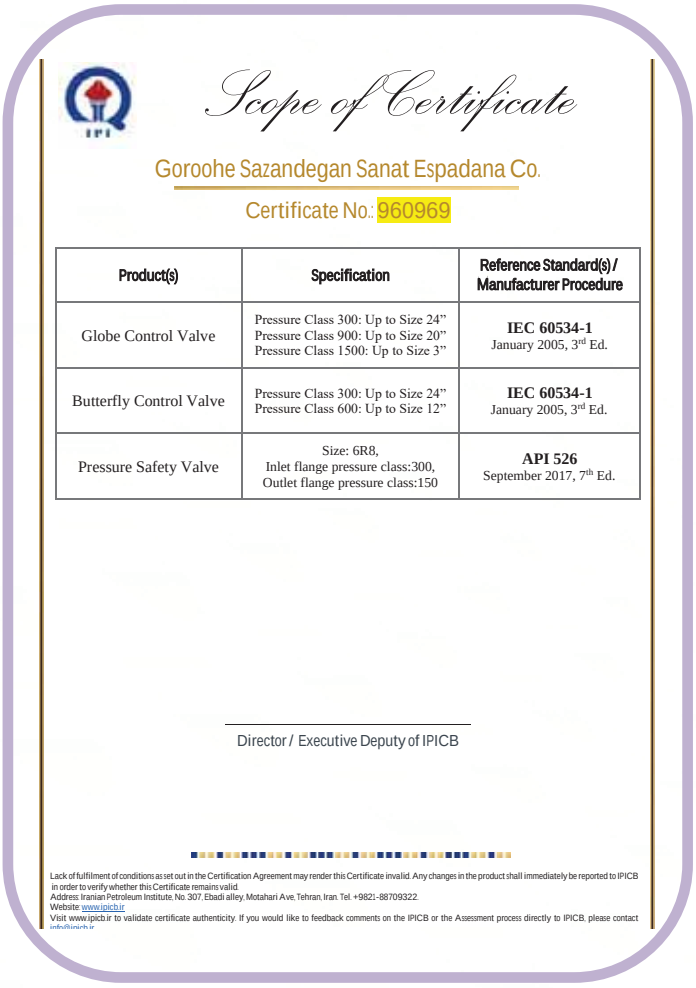

Scope of Certificate

Goroohe Sazandegan Sanat Espadana Co.

Certificate No.: 960969

Product(s)	Specification	Reference Standard(s) / Manufacturer Procedure
Globe Control Valve	Pressure Class 300: Up to Size 24" Pressure Class 900: Up to Size 20" Pressure Class 1500: Up to Size 3"	**IEC 60534-1** January 2005, 3rd Ed.
Butterfly Control Valve	Pressure Class 300: Up to Size 24" Pressure Class 600: Up to Size 12"	**IEC 60534-1** January 2005, 3rd Ed.
Pressure Safety Valve	Size: 6R8, Inlet flange pressure class:300, Outlet flange pressure class:150	**API 526** September 2017, 7th Ed.

Director / Executive Deputy of IPICB

Lack of fulfilment of conditions as set out in the Certification Agreement may render this Certificate invalid. Any changes in the product shall immediately be reported to IPICB in order to verify whether this Certificate remains valid.
Address: Iranian Petroleum Institute, No. 307, Ebadi alley, Motahari Ave, Tehran, Iran. Tel. +9821-88709322.
Website: www.ipicb.ir
Visit www.ipicb.ir to validate certificate authenticity. If you would like to feedback comments on the IPICB or the Assessment process directly to IPICB, please contact

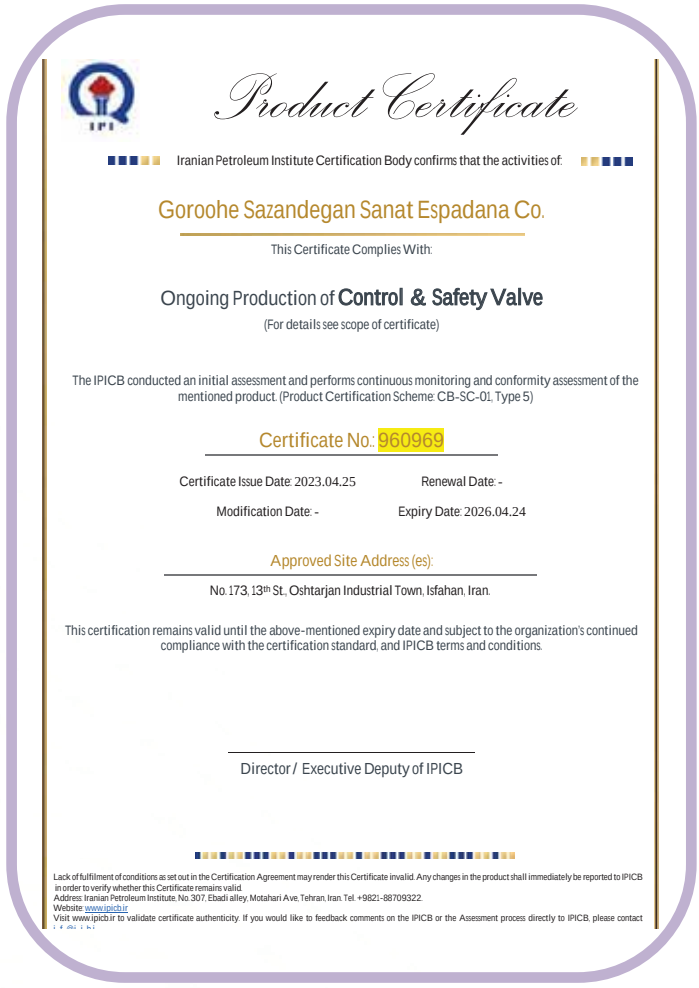

Product Certificate

Iranian Petroleum Institute Certification Body confirms that the activities of:

Goroohe Sazandegan Sanat Espadana Co.

This Certificate Complies With:

Ongoing Production of **Control & Safety Valve**

(For details see scope of certificate)

The IPICB conducted an initial assessment and performs continuous monitoring and conformity assessment of the mentioned product. (Product Certification Scheme: CB-SC-01, Type 5)

Certificate No.: 960969

Certificate Issue Date: 2023.04.25 Renewal Date: -

Modification Date: - Expiry Date: 2026.04.24

Approved Site Address (es):

No. 173, 13th St., Oshtarjan Industrial Town, Isfahan, Iran.

This certification remains valid until the above-mentioned expiry date and subject to the organization's continued compliance with the certification standard, and IPICB terms and conditions.

Director / Executive Deputy of IPICB

Lack of fulfilment of conditions as set out in the Certification Agreement may render this Certificate invalid. Any changes in the product shall immediately be reported to IPICB in order to verify whether this Certificate remains valid.
Address: Iranian Petroleum Institute, No. 307, Ebadi alley, Motahari Ave, Tehran, Iran. Tel. +9821-88709322.
Website: www.ipicb.ir
Visit www.ipicb.ir to validate certificate authenticity. If you would like to feedback comments on the IPICB or the Assessment process directly to IPICB, please contact

MOODI CERTIFICATE

Quality Management System
Certificate of Approval

This is to certify that the Quality Management System of Petroleum, petrochemical and natural gas industries — Sector-specific

Goroohe Sazandegan Sanat Espadana (GSSE)

No. 173, 13th Street, Oshtorjan Inustrial Town,
Zobe Ahan Free Way , Esfahan , Iran

Has been assessed and found to meet the requirements of

ISO/TS29001:2020

This Certification is valid for the following activities.

Design and manufacturing of all types Control Valves, Pressure Regulator Valves, Pressure Safety Valves and Actuators (GSSE)

Certificate Number: QMI12122024
Date of issue: 12-Dec-2024
Valid until: 11-Dec-2027

Authorized by: *Senior Executive*

The Certificate is the Property MOODI.cnt
The Validity of the registration will be continued only.
When the organization accepts the annual surveillance audit.

IAF MOODI

MOODI CERTIFICATE

Health , Safety and Enviroment Management System
Certificate of Approval

This is to certify that the Health , Safety and Enviroment Management System of

Goroohe Sazandegan Sanat Espadana (GSSE)

No. 173, 13th Street, Oshtorjan Inustrial Town,
Zobe Ahan Free Way , Esfahan , Iran

Has been assessed and found to meet the requirements of

HSE-MS

This Certification is valid for the following activities

Design and manufacturing of all types Control Valves, Pressure Regulator Valves, Pressure Safety Valves and Actuators (GSSE)

Certificate Number: QMI12122024
Date of issue: 12-Dec-2024
Valid until: 11-Dec-2027

Authorized by: *Senior Executive*

The Certificate is the Property MOODI.CNT
The Validity of the registration will be continued only
When the organization accepts the annual surveillance audit .

IAF MOODI

MOODI CERTIFICATE

Quality Management System
Certificate of Approval

This is to certify that the Quality Management System of

Goroohe Sazandegan Sanat Espadana (GSSE)

No. 173, 13th Street, Oshtorjan Inustrial Town,
Zobe Ahan Free Way , Esfahan , Iran

Has been assessed and found to meet the requirements of

ISO9001:2015

This Certification is valid for the following activities.

Design and manufacturing of all types Control Valves, Pressure Regulator Valves, Pressure Safety Valves and Actuators (GSSE)

Certificate Number: QMI12122024
Date of issue: 12-Dec-2024
Valid until: 11-Dec-2027

Authorized by: *Senior Executive*

The Certificate is the Property MOODI.cnt
The Validity of the registration will be continued only.
When the organization accepts the annual surveillance audit.

IAF MOODI NACI



CONTROL VALVE
PRESSURE REGULATOR
BACK PRESSURE VALVE
TANK BLANKETING
PRESSURE RELIEF VALVE
ACTUATORS

Iranian Knowledge Based Enterprise

No. 173, 13th Street, Oshtorjan
Industrial Town, Zobe Ahan Freeway,
Esfshan - IRAN

Sales@gsse-co.com

www.gsse-co.com

+98 313 760 2478 - 80

+98 313 760 2583

+98 936 325 4202
+98 313 760 7478